DIVISION OF MOTORIST SERVICES

MANUFACTURED HOUSING SECTION

INSTALLER LICENSING PROGRAM

INSTALLATION COURSE FOR MANUFACTURED HOUSING

A SAFER FLORIDA

HIGHWAY SAFETY AND MOTOR VEHICLES

Department of Highway Safety and Motor Vehicles

Division of Motorist Services

Manufactured Housing Section

Section Headquarters

2900 Apalachee Parkway
Rooms A 128 & 129, MS66
Neil Kirkman Building
Tallahassee, FL 32399

Phone 850-617-3004
Fax 850-617-5191

Section Website
www.flhsmv.gov/mobilehome/

Mobile Home Consumer Complaints against

(Installers)
407-445-7408

(Dealers and/or Manufacturers)
813-612-7140

Revised 01/11

Table of Contents ***Page***

Introduction & obtaining an installers license…… 1
Dates of change to mobile home tie-downs…….. 2
Labels and Identification ……. 3 - 7
Zones (climate, roof, wind, flood, performance code)…….. 8 – 12
Florida Statutes & Florida Building Code vs HUD…….. 13
Installation Standards and Federal Involvement…… 14
Definitions and Abbreviations…… 15 - 17
Permits, Warranty, Blocking plans, Sample Permit……... 18 - 22
Product Approval…… 23
Pre Installation Considerations……... 24
Safety…….. 25 – 26

Foundations

Site Preparation…… 27 - 30
Soil Conditions and Soil Bearing…… 31 – 34
Foundations and foundation sizing / Interpolation……. 35 - 40
Plastic pier footer sizing chart……. 41
Pier construction, clearance under home, column supports…… 42 - 50
Leveling the home…… 51
Pier spacing and pier loads for new and used homes…….. 52 - 69

Anchors and Tie-downs

Anchorage and torque probe…… 70 - 72
Anchor loads, installation, identification…… 73 - 75
Strap angle and Stabilizer Plates……. 76
Florida over rides on anchorage…….. 77
Anchors, straps and stabilizer plate installation (drawing)……. 78
Tie-Down Straps; vertical, diagonal, centerline…….. 79 – 85
Concrete anchors……. 86
Longitudinal Protections (LSDs)……. 87 - 90
Lateral Protection (Lateral Arms)…… 91 - 95
Other tie-down systems…… 96

Close Up

Gasket and Structural Interconnection of multi-section homes…… 97
Roof close up and hinged roofs…… 98 - 101
Vinyl Siding……. 102 - 103

Utilities and Miscellaneous

Plumbing……...104 - 107
Electrical……...108 - 109
HVAC and dryer ducts……110 - 111
Fireplaces……..112
Skirting and Ventilation……113
Inspecting the Centerline……..114

Introduction

The installation of manufactured/mobile homes is no longer a simple process. Charts, graphs, tables, diagrams are not easily understood and training is required to properly follow the installation process.

For most people a home is the largest, single purchase they will ever make. *Correct set-up is one of the most critical elements for a sound manufactured home.* Even the best manufactured home will not function properly if it is not set-up correctly. Correct set-up is absolutely essential to homeowner satisfaction.

The importance of correct set-up cannot be over emphasized.

If you are not certain of the proper set-up procedure or you encounter unusual conditions, you must contact your dealer or factory service representative.

This course will provide you with a better understanding of the importance of correct installation and the effects of poor installation on mobile/manufactured homes.

Obtaining an installer's license

- 12 hour training course
- Take and pass an exam
- Obtain a $5000 Performance Bond
- Obtain $100,000 general liability insurance
- Apply to the state for your license
- $200.00 the first year
- $150.00 each year following if submitted before Oct. 1st
- $50.00 late fee if submitted after October 1st
- Licensing period runs from October 1st to September 30th

Dates of change to mobile home tie-downs

1973	First tie-down requirements, the 4 corners only
June 15, 1976	HUD takes over the mobile home program. Additional tie-down requirements added according to the manufacturer's installation manual.
August 24, 1992	Hurricane Andrew
July 13, 1994	HUD strengthens its structural requirements
October 1, 1996	Florida requires installers to be licensed
February 23, 1998	Tornados in the Orlando area
March 29, 1999	Major changes to Rule 15C-1
January 1, 2009	HUD standardizes the mobile home installation nationwide

Labels and Identification

Labels on the home

Each section of a home manufactured under the federal manufactured home construction and safety standards shall bear a label issued by the inspection agency. A single wide home would have one label; a double wide would have two labels, etc. The label is commonly referred to as the "HUD label" and is approximately 2" by 4" in size and is generally located on the rear of each unit and is required to be affixed in a permanent manner. The label indicates that the manufacturer has certified that the home meets the applicable standards and that the construction process has been monitored by an inspection agency.

Each home will bear a State of Florida installation decal. These labels are a light green color and are approximately 2 ¾" by 3 ⅞". The decal shall be placed on the home prior to installation and shall be affixed adjacent to the HUD label. If the mobile/manufactured home is a pre-HUD home or if the HUD seal has been removed or concealed, the decal shall be affixed to the lower left corner of the end of the home opposite the hitch (tail light).

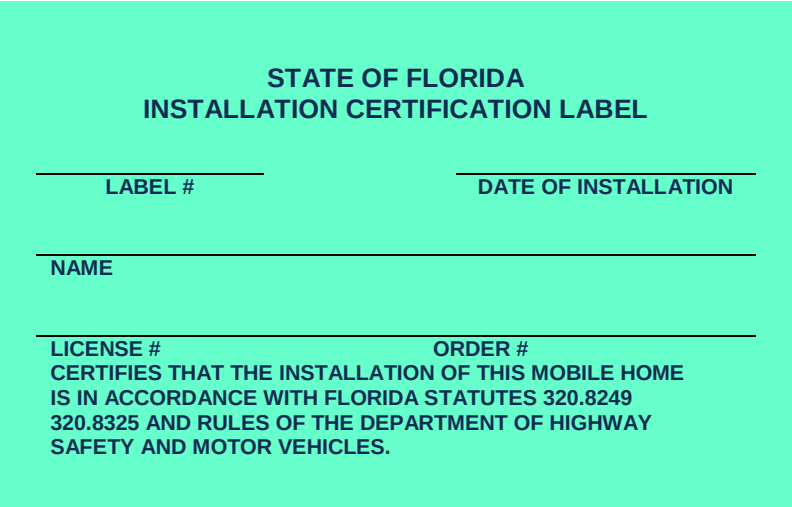

Labels and Identification

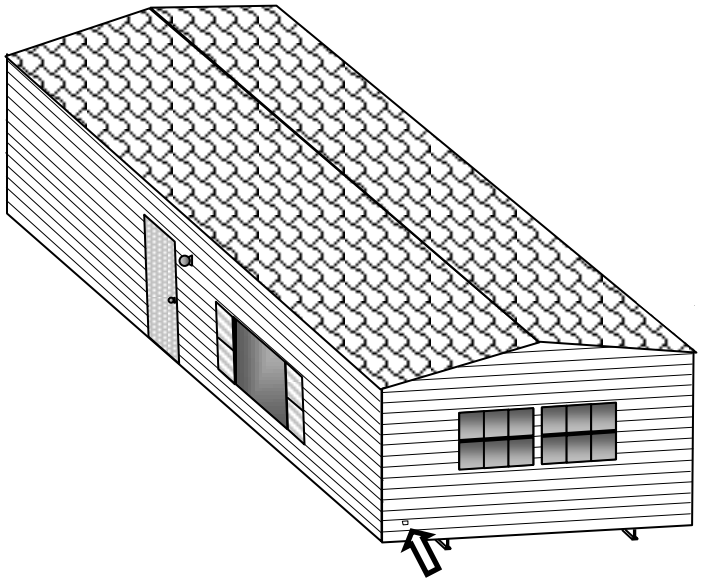

The HUD label(s) shall be located at the tail-light end of each transportable section of the manufactured home approximately one foot up from the floor and one foot in from the road side. The road side is the right side of the manufactured home when one views the home from the tow bar end of the home.

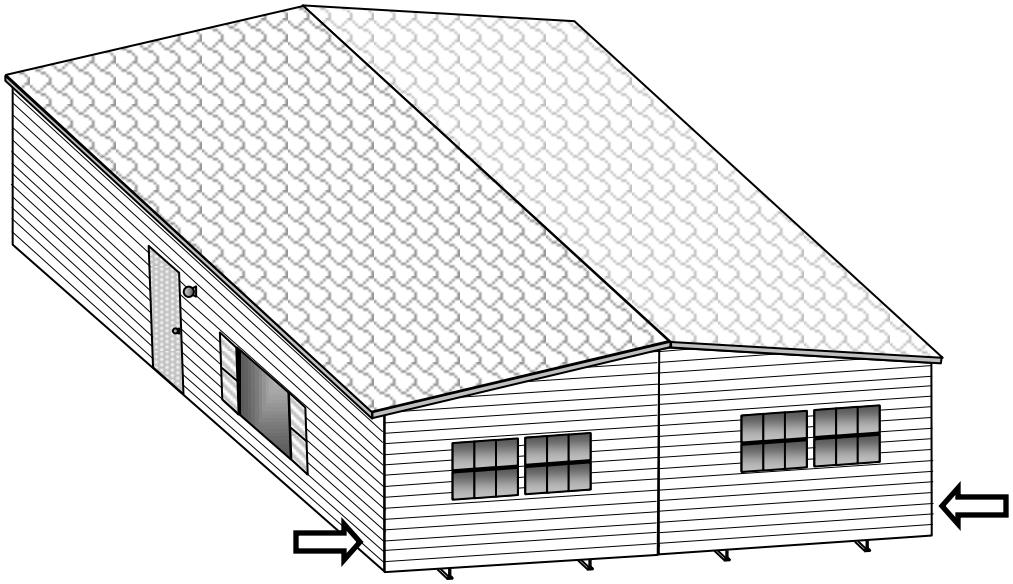

The HUD labels on multi-wide homes are located at the tail-light end of each transportable section of the home and are generally located on the sides of the home, since the installer will usually install vinyl siding on the ends of the home.

Labels and Identification

Data Plate

Each manufactured home will have identification inside the home known as a data plate. The data plate is usually a single piece of 8 ½ by 11 piece of paper with information about the home. The name of the manufacturer, the date of manufacture, HUD label number(s), serial number, engineering company, appliance and model numbers, wind, roof load, and thermal zones. *Homes built before June 15, 1976 do not have Data Plates or HUD labels.*

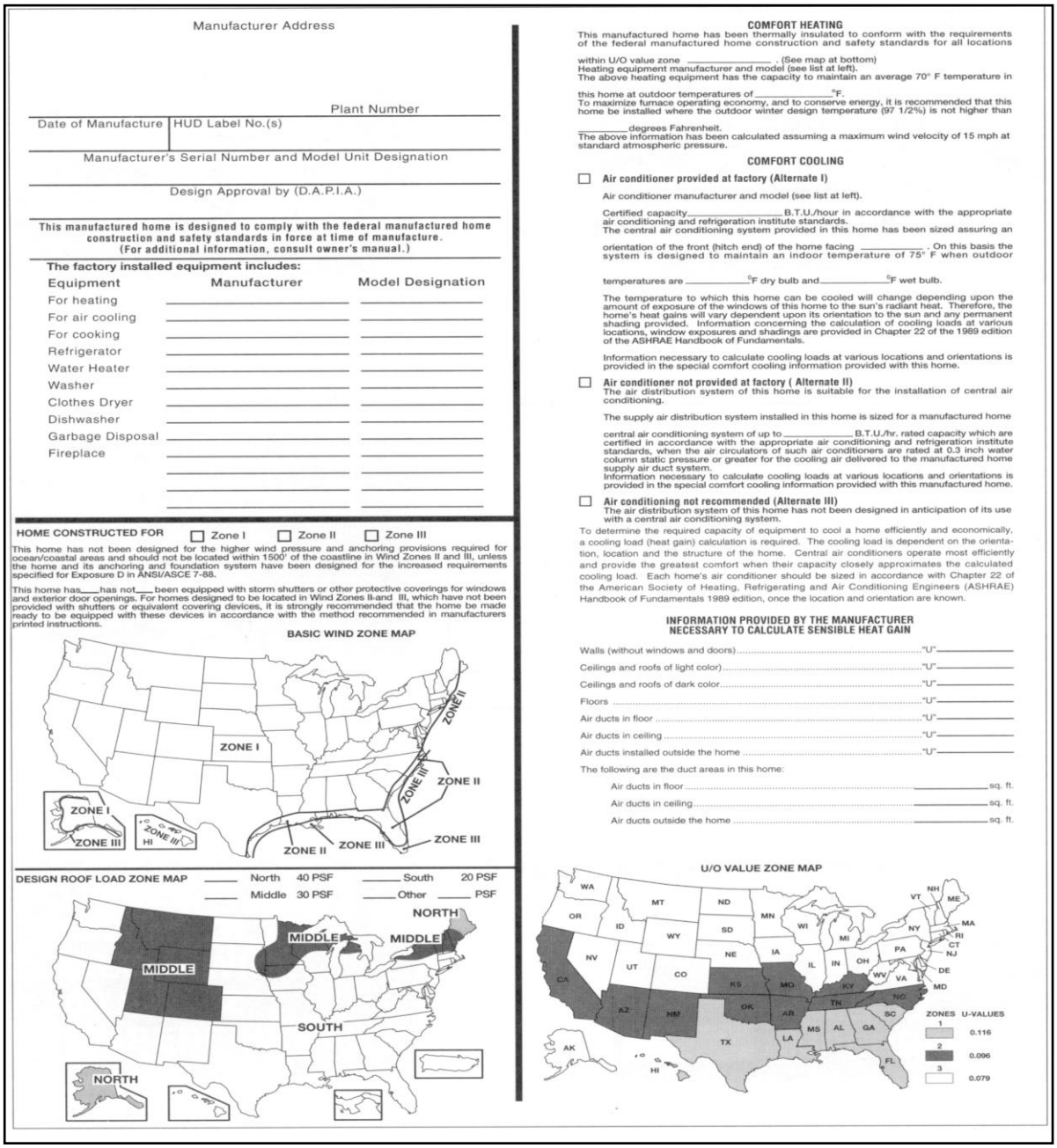

Manufacturer Address

Plant Number

Date of Manufacture | HUD Label No.(s)

Manufacturer's Serial Number and Model Unit Designation

Design Approval by (D.A.P.I.A.)

This manufactured home is designed to comply with the federal manufactured home construction and safety standards in force at time of manufacture. (For additional information, consult owner's manual.)

The factory installed equipment includes:

Equipment	Manufacturer	Model Designation
For heating		
For air cooling		
For cooking		
Refrigerator		
Water Heater		
Washer		
Clothes Dryer		
Dishwasher		
Garbage Disposal		
Fireplace		

HOME CONSTRUCTED FOR ☐ Zone I ☐ Zone II ☐ Zone III

This home has not been designed for the higher wind pressure and anchoring provisions required for ocean/coastal areas and should not be located within 1500' of the coastline in Wind Zones II and III, unless the home and its anchoring and foundation system have been designed for the increased requirements specified for Exposure D in ANSI/ASCE 7-88.

This home has___has not___been equipped with storm shutters or other protective coverings for windows and exterior door openings. For homes designed to be located in Wind Zones II-and III, which have not been provided with shutters or equivalent covering devices, it is strongly recommended that the home be made ready to be equipped with these devices in accordance with the method recommended in manufacturers printed instructions.

BASIC WIND ZONE MAP

DESIGN ROOF LOAD ZONE MAP

___ North 40 PSF ___ South 20 PSF
___ Middle 30 PSF ___ Other ___ PSF

COMFORT HEATING

This manufactured home has been thermally insulated to conform with the requirements of the federal manufactured home construction and safety standards for all locations

within U/O value zone _____ . (See map at bottom)
Heating equipment manufacturer and model (see list at left).
The above heating equipment has the capacity to maintain an average 70° F temperature in

this home at outdoor temperatures of _____°F.
To maximize furnace operating economy, and to conserve energy, it is recommended that this home be installed where the outdoor winter design temperature (97 1/2%) is not higher than

_____ degrees Fahrenheit.
The above information has been calculated assuming a maximum wind velocity of 15 mph at standard atmospheric pressure.

COMFORT COOLING

☐ **Air conditioner provided at factory (Alternate I)**

Air conditioner manufacturer and model (see list at left).

Certified capacity_____ B.T.U./hour in accordance with the appropriate air conditioning and refrigeration institute standards.
The central air conditioning system provided in this home has been sized assuring an

orientation of the front (hitch end) of the home facing _____ . On this basis the system is designed to maintain an indoor temperature of 75° F when outdoor

temperatures are _____°F dry bulb and_____°F wet bulb.

The temperature to which this home can be cooled will change depending upon the amount of exposure of the windows of this home to the sun's radiant heat. Therefore, the home's heat gains will vary dependent upon its orientation to the sun and any permanent shading provided. Information concerning the calculation of cooling loads at various locations, window exposures and shadings are provided in Chapter 22 of the 1989 edition of the ASHRAE Handbook of Fundamentals.

Information necessary to calculate cooling loads at various locations and orientations is provided in the special comfort cooling information provided with this home.

☐ **Air conditioner not provided at factory (Alternate II)**
The air distribution system of this home is suitable for the installation of central air conditioning.

The supply air distribution system installed in this home is sized for a manufactured home

central air conditioning system of up to _____ B.T.U./hr. rated capacity which are certified in accordance with the appropriate air conditioning and refrigeration institute standards, when the air circulators of such air conditioners are rated at 0.3 inch water column static pressure or greater for the cooling air delivered to the manufactured home supply air duct system.
Information necessary to calculate cooling loads at various locations and orientations is provided in the special comfort cooling information provided with this manufactured home.

☐ **Air conditioning not recommended (Alternate III)**
The air distribution system of this home has not been designed in anticipation of its use with a central air conditioning system.

To determine the required capacity of equipment to cool a home efficiently and economically, a cooling load (heat gain) calculation is required. The cooling load is dependent on the orientation, location and the structure of the home. Central air conditioners operate most efficiently and provide the greatest comfort when their capacity closely approximates the calculated cooling load. Each home's air conditioner should be sized in accordance with Chapter 22 of the American Society of Heating, Refrigerating and Air Conditioning Engineers (ASHRAE) Handbook of Fundamentals 1989 edition, once the location and orientation are known.

INFORMATION PROVIDED BY THE MANUFACTURER NECESSARY TO CALCULATE SENSIBLE HEAT GAIN

Walls (without windows and doors) ..... "U"_____
Ceilings and roofs of light color) ..... "U"_____
Ceilings and roofs of dark color ..... "U"_____
Floors ..... "U"_____
Air ducts in floor ..... "U"_____
Air ducts in ceiling ..... "U"_____
Air ducts installed outside the home ..... "U"_____

The following are the duct areas in this home:

Air ducts in floor ..... _____ sq. ft.
Air ducts in ceiling ..... _____ sq. ft.
Air ducts outside the home ..... _____ sq. ft.

U/O VALUE ZONE MAP

Labels and Identification

IDENTIFYING A MANUFACTURED/MOBILE HOME

HUD LABEL

Serial Number stamped in the front crossmember.

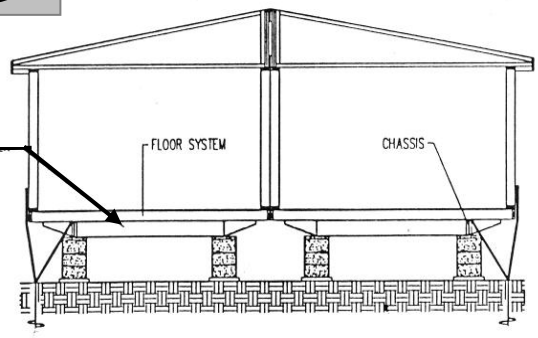

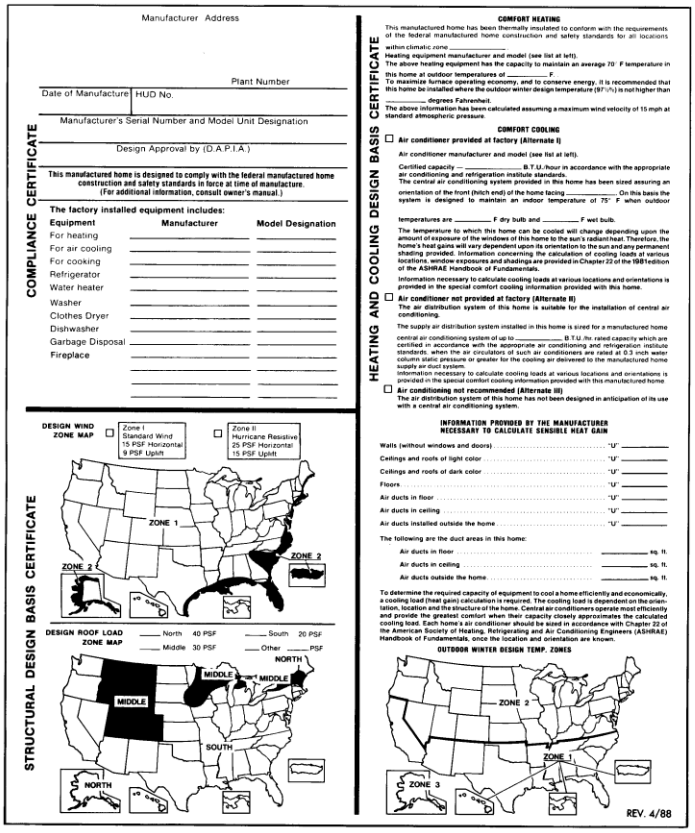

Manufacturer Address

Plant Number

Date of Manufacture | HUD No.

Manufacturer's Serial Number and Model Unit Designation

Design Approval by (D.A.P.I.A.)

COMPLIANCE CERTIFICATE

This manufactured home is designed to comply with the federal manufactured home construction and safety standards in force at time of manufacture. (For additional information, consult owner's manual.)

The factory installed equipment includes:

Equipment	Manufacturer	Model Designation
For heating		
For air cooling		
For cooking		
Refrigerator		
Water heater		
Washer		
Clothes Dryer		
Dishwasher		
Garbage Disposal		
Fireplace		

STRUCTURAL DESIGN BASIS CERTIFICATE

DESIGN WIND ZONE MAP

☐ Zone I Standard Wind 15 PSF Horizontal 9 PSF Uplift

☐ Zone II Hurricane Resistive 25 PSF Horizontal 15 PSF Uplift

ZONE 1 ZONE 2 ZONE 2

DESIGN ROOF LOAD ZONE MAP

___ North 40 PSF ___ South 20 PSF

___ Middle 30 PSF ___ Other ___ PSF

NORTH MIDDLE MIDDLE MIDDLE SOUTH NORTH

HEATING AND COOLING DESIGN BASIS CERTIFICATE

COMFORT HEATING

This manufactured home has been thermally insulated to conform with the requirements of the federal manufactured home construction and safety standards for all locations within climatic zone ____

Heating equipment manufacturer and model (see list at left).

The above heating equipment has the capacity to maintain an average 70° F temperature in this home at outdoor temperatures of ____ F.

To maximize furnace operating economy, and to conserve energy, it is recommended that this home be installed where the outdoor winter design temperature (97½%) is not higher than ____ degrees Fahrenheit.

The above information has been calculated assuming a maximum wind velocity of 15 mph at standard atmospheric pressure.

COMFORT COOLING

☐ Air conditioner provided at factory (Alternate I)

Air conditioner manufacturer and model (see list at left).

Certified capacity — ____ B.T.U./hour in accordance with the appropriate air conditioning and refrigeration institute standards.

The central air conditioning system provided in this home has been sized assuring an orientation of the front (hitch end) of the home facing ____. On this basis the system is designed to maintain an indoor temperature of 75° F when outdoor temperatures are ____ F dry bulb and ____ F wet bulb.

The temperature to which this home can be cooled will change depending upon the amount of exposure of the windows of this home to the sun's radiant heat. Therefore, the home's heat gains will vary dependent upon its orientation to the sun and any permanent shading provided. Information concerning the calculation of cooling loads at various locations, window exposures and shadings are provided in Chapter 22 of the 1981 edition of the ASHRAE Handbook of Fundamentals.

Information necessary to calculate cooling loads at various locations and orientations is provided in the special comfort cooling information provided with this home.

☐ Air conditioner not provided at factory (Alternate II)

The air distribution system of this home is suitable for the installation of central air conditioning.

The supply air distribution system installed in this home is sized for a manufactured home central air conditioning system of up to ____ B.T.U. /hr. rated capacity which are certified in accordance with the appropriate air conditioning and refrigeration institute standards: when the air circulators of such air conditioners are rated at 0.3 inch water column static pressure or greater for the cooling air delivered to the manufactured home supply air duct system.

Information necessary to calculate cooling loads at various locations and orientations is provided in the special comfort cooling information provided with this manufactured home.

☐ Air conditioning not recommended (Alternate III)

The air distribution system of this home has not been designed in anticipation of its use with a central air conditioning system.

INFORMATION PROVIDED BY THE MANUFACTURER NECESSARY TO CALCULATE SENSIBLE HEAT GAIN

Walls (without windows and doors)	"U"	
Ceilings and roofs of light color	"U"	
Ceilings and roofs of dark color	"U"	
Floors	"U"	
Air ducts in floor	"U"	
Air ducts in ceiling	"U"	
Air ducts installed outside the home	"U"	

The following are the duct areas in this home:

Air ducts in floor	____ sq. ft.
Air ducts in ceiling	____ sq. ft.
Air ducts outside the home	____ sq. ft.

To determine the required capacity of equipment to cool a home efficiently and economically, a cooling load (heat gain) calculation is required. The cooling load is dependent on the orientation, location and the structure of the home. Central air conditioners operate most efficiently and provide the greatest comfort when their capacity closely approximates the calculated cooling load. Each home's air conditioner should be sized in accordance with Chapter 22 of the American Society of Heating, Refrigerating and Air Conditioning Engineers (ASHRAE) Handbook of Fundamentals, once the location and orientation are known.

OUTDOOR WINTER DESIGN TEMP. ZONES

ZONE 2 ZONE 1 ZONE 3

REV. 4/88

DATA PLATE

Never remove a data plate for any reason.

Labels and Identification

Modular Homes

Modular homes are homes built in a factory (like mobile homes) and are built to the Florida Building Code and are under the control of the Department of Community Affairs.

The Department of Community Affairs' phone number is 850-487-1824.

General Contractors are needed to install modular homes.

Modular home guidelines are found in Florida Statutes Chapter 553, Part 1 and Rule 9B-1.

The insignia for modular homes looks similar to this one and are found in the electrical distribution panel box.

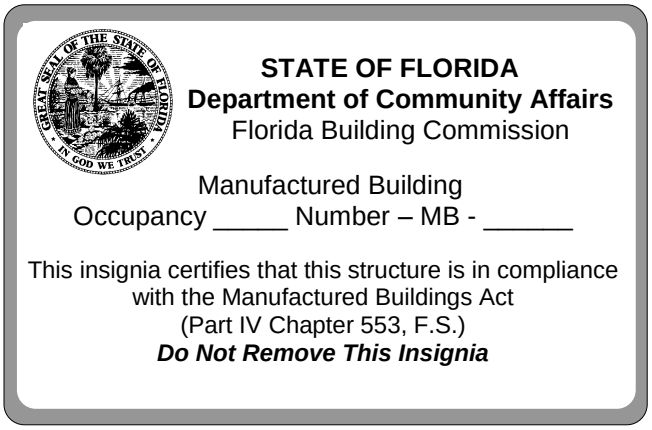

Florida's Roof and Climate Zones

Florida is located in Climate Zone 1

Climate zones are used to figure heating and air conditioning needs.

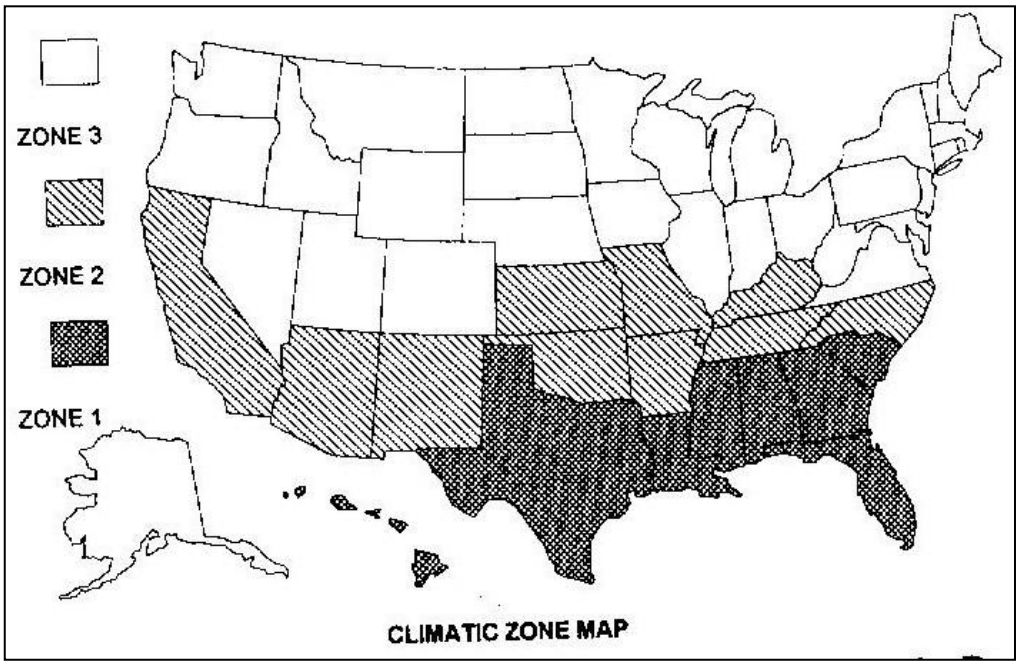

Florida's Roof Load is 20 psf

The roof load map is one indicator to installers of weight on piers.

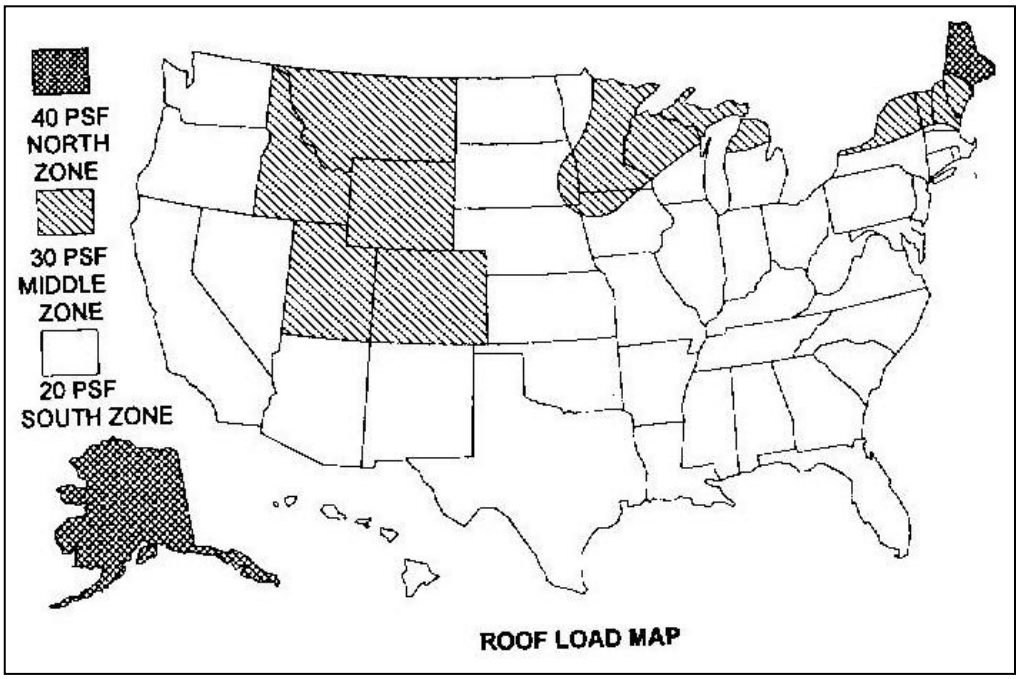

Wind Zones for manufactured homes

Hurricane Resistant

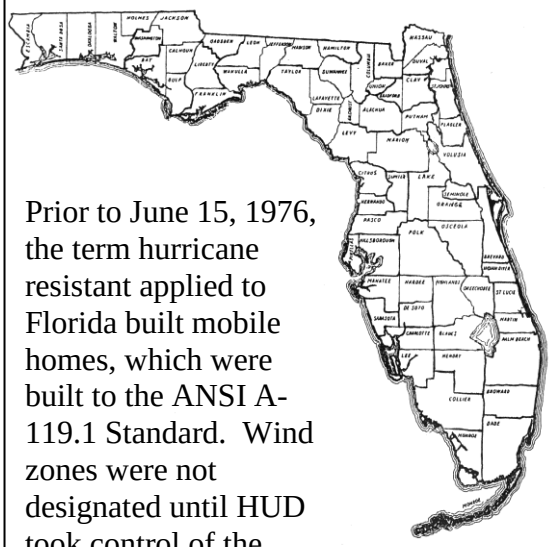

Prior to June 15, 1976, the term hurricane resistant applied to Florida built mobile homes, which were built to the ANSI A-119.1 Standard. Wind zones were not designated until HUD took control of the industry.

Wind Zone II

June 15, 1976, HUD takes over the regulation and construction of the mobile home industry nationwide. All mobile homes built in or to be shipped into Florida were designated as Wind Zone II.

Wind Zone II & III

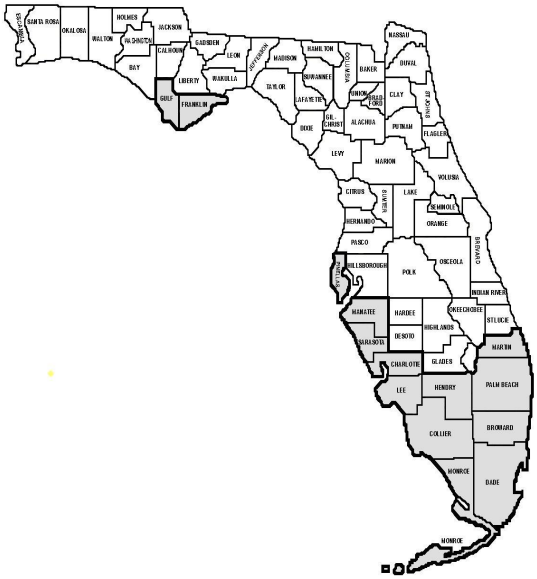

July 13, 1994, HUD added Wind Zone III after a two year study of Hurricane Andrew. The following counties in Florida are designated as in Wind Zone III; Broward, Charlotte, Collier, Dade, Franklin, Gulf, Hendry, Lee, Martin, Manatee, Monroe, Palm Beach, Pinellas and Sarasota.
Wind Zone II homes shall only be located in Wind Zone II counties.
Wind Zone III homes may be located in any county since they are built to stronger criteria.

Wind Zones for manufactured homes

Homes with an Exposure D rating.

Exposure D is a rating given to the manufactured home industry for those homes that will be located within 1500 feet of the coast line. HUD has interpreted exposure D as just the coastline and does not include bays, rivers and lakes. All HUD manufactured homes and park trailers constructed after July 13, 1994, that are located in Exposure "D", Wind Zone II or Wind Zone III, shall have a data plate affixed in the home by the manufacturer as proof that the home meets the design standards.

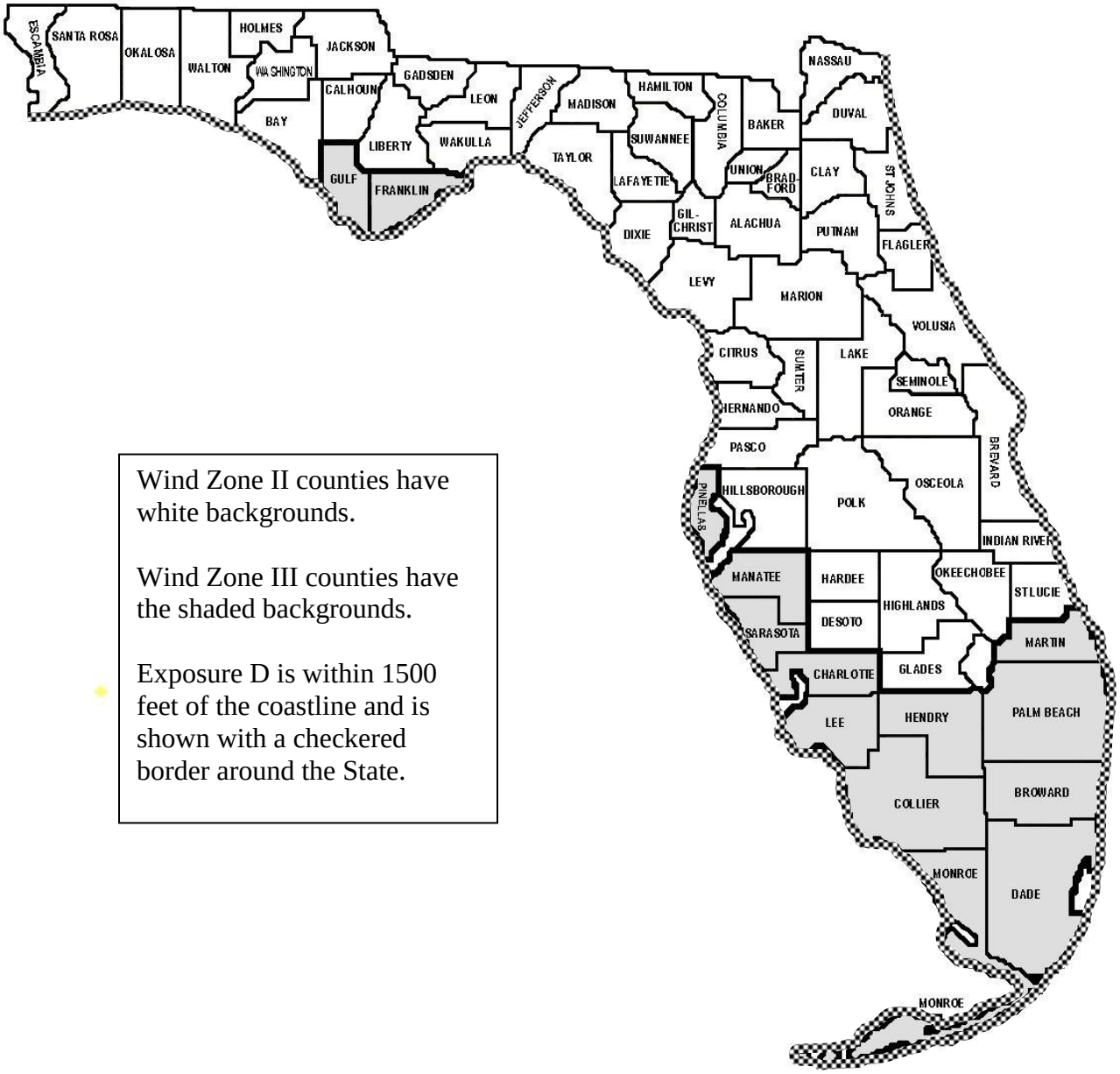

Wind Zone II counties have white backgrounds.

Wind Zone III counties have the shaded backgrounds.

Exposure D is within 1500 feet of the coastline and is shown with a checkered border around the State.

DO NOT CONFUSE MANUFACTURED/MOBILE HOME WIND ZONES

WITH

FLORIDA'S BUILDING CODE WIND ZONE MAP

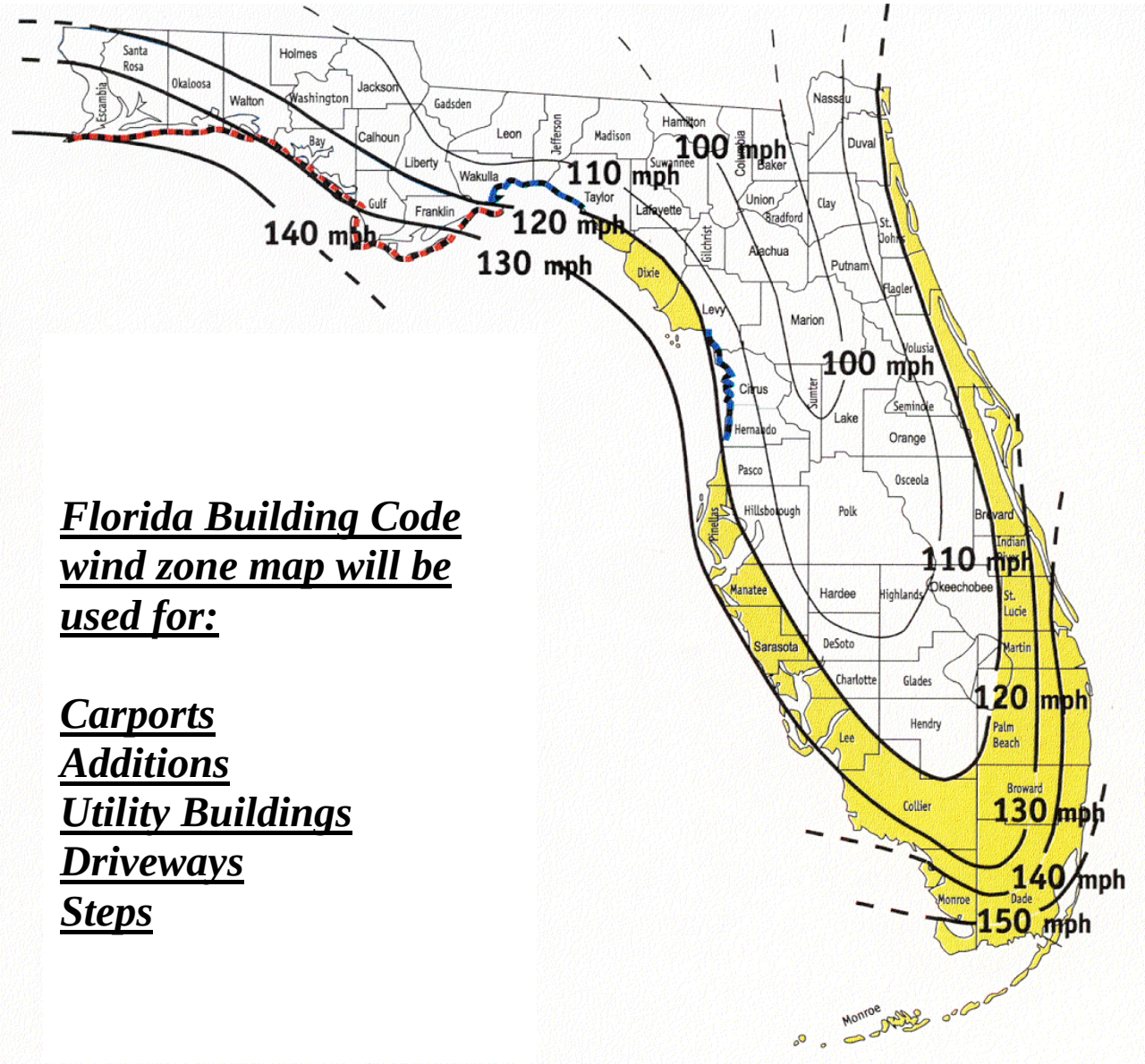

Florida Building Code wind zone map will be used for:

Carports
Additions
Utility Buildings
Driveways
Steps

Installation of homes in flood zone areas

New Homes

In flood hazard areas, foundations, anchoring , and support systems must be capable of resisting loads associated with design flood and wind events or combined wind and flood events, and homes must be installed on foundation supports that are designed and anchored to prevent floatation, collapse, or lateral movement of the structure. Manufacturer's installation instructions must indicate whether:

(a) The foundation specifications have been designed for flood-resistant considerations, and, if so, the conditions of applicability for velocities, depths, or wave action; or
(b) The foundation specifications are not designed to address flood loads.

All HUD manufactured homes and park trailers located in flood prone areas shall have the foundation comply with the requirements set forth in the manual, Manufactured Home Installation in Flood Hazard Areas, FEMA 85/September 1985, published by the Federal Emergency Management Agency (FEMA).

Performance Code

The Manufactured Home Construction and Safety Standard (HUD Code) is a performance code and is a federal or nationwide code. In other words, HUD publishes certain criteria on wind speeds and construction and requires manufacturers to follow the regulations. The manufacturers have several volumes of books that describe in detail how their homes are to be built and have been reviewed and approved by a Design Agency called a DAPIA. Manufactured Homes are built to the following performance standards.

HUD'S DESIGN CRITERIA

ASCE 7-88
Wind Zone II design wind speed - 100 MPH
Wind Zone III design wind speed - 110 MPH

Lateral	**Uplift**
39 psf - Wind Zone II	27 psf - Wind Zone II
47 psf - Wind Zone III	32 psf – Wind Zone III

Florida Statutes and the Florida Building Code regarding mobile homes.

[1]553.73 Florida Statute concerning the Florida Building Code.

(9) The following buildings, structures, and facilities are exempt from the Florida Building Code as provided by law, and any further exemptions shall be as determined by the Legislature and provided by law:
(a) Buildings and structures specifically regulated and preempted by the Federal Government.
(b) Railroads and ancillary facilities associated with the railroad.
(c) Nonresidential farm buildings on farms.
(d) Temporary buildings or sheds used exclusively for construction purposes.
(e) Mobile or modular structures used as temporary offices, except that the provisions of part II relating to accessibility by persons with disabilities shall apply to such mobile or modular structures.
(f) Those structures or facilities of electric utilities, as defined in s. 366.02, which are directly involved in the generation, transmission, or distribution of electricity.
(g) Temporary sets, assemblies, or structures used in commercial motion picture or television production, or any sound-recording equipment used in such production, on or off the premises.
(h) Storage sheds that are not designed for human habitation and that have a floor area of 720 square feet or less are not required to comply with the mandatory wind-borne-debris-impact standards of the Florida Building Code.
(i) Chickees constructed by the Miccosukee Tribe of Indians of Florida or the Seminole Tribe of Florida. As used in this paragraph, the term "chickee" means an open-sided wooden hut that has a thatched roof of palm or palmetto or other traditional materials, and that does not incorporate any electrical, plumbing, or other nonwood features.

The Florida Building Code
102.2 Building.
The provisions of the *Florida Building Code* shall apply to the construction, erection, alteration, modification, repair, equipment, use and occupancy, location, maintenance, removal and demolition of every public and private building, structure or facility or floating residential structure, or any appurtenances connected or attached to such buildings, structures or facilities. Additions, alterations, repairs and changes of use or occupancy group in all buildings and structures shall comply with the provisions provided in Chapter 34 of this code. The following buildings, structures and facilities are exempt from the *Florida Building Code* as provided by law, and any further exemptions shall be as determined by the legislature and provided by law:
(a) Building and structures specifically regulated and preempted by the federal government.
(b) Railroads and ancillary facilities associated with the railroad.
(c) Nonresidential farm buildings on farms.
(d) Temporary buildings or sheds used exclusively for construction purposes.
(e) Mobile or modular structures used as temporary offices, except that the provisions of Part V (Section 553.501-553.513, Florida Statutes) relating to accessibility by persons with disabilities shall apply to such mobile or modular structures.
(f) Those structures or facilities of electric utilities, as defined in Section 366.02, Florida Statutes, which are directly involved in the generation, transmission, or distribution of electricity.
(g) Temporary sets, assemblies, or structures used in commercial motion picture or television production, or any sound-recording equipment used in such production, on or off the premises.
(h) Chickees constructed by the Miccosukee Tribe of Indians of Florida or the Seminole Tribe of Florida. As used in this paragraph, the term "chickee" means an open-sided wooden hut that has a thatched roof of palm or palmetto or other traditional materials, and that does not incorporate any electrical, plumbing, or other nonwood features.

Installation Standards

Installation Standards for Manufactured Homes

The standards listed below are the requirements for all manufactured homes installation, unless otherwise specified in the Florida Administrative Code, Rules. The Rules governing the license and requirement for individuals to become licensed are found in Rule 15C-2. The Rules governing the actual standards for manufactured home installation are found in Rule 15C-1.

Installation standards for the set-up of new or used manufactured homes shall be in compliance with the manufacturer's installation instructions, unless otherwise specified in Rule 15C-1.

Installation standards for the set-up of used manufactured homes shall be in compliance with the manufacturer's installation instructions if available. In the absence of the manufacturer's installation instructions, used manufactured homes shall comply with the provisions of Rule 15C-1.

Federal Involvement in Construction and Installation of homes.

The manufactured home program is governed by the federal government and is controlled by the Department of Housing and Urban Development (HUD). These homes are built to HUD's Manufactured Home Construction and Safety Standards. Effective January 1, 2009, HUD will also govern the installation of all new manufactured homes through the Model Manufactured Home Installation Standards.

HUD requires all installations to meet the requirements of the Model Manufactured Home Installation Standards (MMHIS). Manufacturers of manufactured homes are required to meet the installation standards and their installation manuals will reflect all of the requirements of the HUD installation standard. Florida requires all new homes to be installed to the manufacturer's installation manual, so installers are required to follow all of the guidelines in the manuals which include fastening the home together, blocking and foundation, tie-downs, electrical, plumbing, roofing and vinyl siding. However, HUD allows States to be more stringent than the MMHIS and Florida overrides HUD's installation standards in many locations and those are listed in this manual and are marked with this symbol: ► ***Florida override*** ◄

Definitions

for the purpose of Rule 15C-1, the following words have the meaning indicated:

(1) **"Department"** means the Department of Highway Safety and Motor Vehicles.

(2) **"Dealer Installer"** means any licensed mobile/manufactured home dealer who is authorized by the department to install mobile/manufactured homes.

(3) **"Licensed Installer"** means any person, other than direct employees of licensed dealers or manufacturers, who engages in mobile home installation and has obtained a license to do so from the department.

(4) **"Manufacturer Installer"** means any licensed mobile/manufactured home manufacturer who is authorized by the department to install mobile/manufactured homes.

(5) **"Ground Anchor"** means any device approved by the department and used for the purpose of securing a mobile/manufactured home or park trailer to the ground in order to resist wind forces. Ground anchors are rated by working load, which is the maximum load for design purposes. The ultimate load is the working or design load multiplied by the safety factor of 1.5.

(6) **"Frame Tie or Tie Down"** means any device or method approved by the department and used for the purpose of securing the mobile/manufactured home or park trailer to ground anchors in order to resist lateral wind forces.

(7) "**Vertical Tie**" means any device or method approved by the department and used for the purpose of securing the mobile/manufactured home or park trailer to ground anchors in order to resist vertical or uplift forces caused by the wind.

(8) "**Over-Roof Tie**" means any device approved by the mobile/manufactured home manufacturer or listed by the department and used for the purpose of securing the mobile/manufactured home systems to ground anchors in order to resist wind forces. Ties may be installed over metal roofs.

(9) "**Mobile/Manufactured Home**" means a structure, transportable in one or more sections, which is eight body feet (8') or more in width, greater than four hundred (400) square feet and which is built on an integral chassis and designed to be used as a dwelling when connected to the required utilities and includes the plumbing, heating, air conditioning, and electrical systems contained herein.

Definitions, *continued*

(10) "**Park Trailer**" means a transportable unit which has a body width not exceeding fourteen feet (14') and which is built on a single chassis and is designed to provide seasonal or temporary living quarters when connected to utilities necessary for operation of installed fixtures and appliances.

- Park trailers built to 400 sq ft are constructed using the ANSI A-119.5 Standard.
- Park trailers built from 401 sq ft to 500 sq ft are constructed to the Department of Housing and Urban Development's Manufactured Home Construction and Safety Standards and are known as HUD Park Models.

(11) "**Set-Up**" means the operations performed by a licensed installer, dealer installer or manufacturer installer, at the occupancy site which render a mobile/manufactured home or park trailer fit for habitation. Such operations include, but are not limited to, transporting, positioning, blocking, leveling, supporting, tying down, making minor adjustments, assembling multiple or expandable units and connecting utility systems as defined in Rule 15C-2.0072.

(12) "**Stabilizer Device**" means a device approved by the department that is installed with the ground anchor to resist lateral movement of the mobile/manufactured home and anchor.

(13) **"Exposure D"** means flat, unobstructed areas exposed to wind flowing over large bodies of water. This exposure shall apply only to those buildings and other structures exposed to the wind coming from over the water. Exposure "D" extends inland from the shoreline a distance of 1500 feet or 10 times the height of the building or structure, whichever is greater.

(14) "**Longitudinal Tie Downs**" means an anchor system or a longitudinal stabilizing device (system) designed to resist horizontal wind loads in the long direction of the home, i.e., when wind loading is applied to one of the ends of a home.

Words that mean the same

Centerline, mate line, marriage wall all mean the center walls of a multi-section home.
Frame and I-beam both mean the steel support structure of the home.
Frame tie and diagonal tie both mean a support strap at 45 degrees.
Vertical and sidewall ties both mean a support strap at 90 degrees.
Tie or hurricane tie or strap or hurricane strap are all 1 ¼" support straps.

Common Abbreviations

HUD	U.S. Department of Housing and Urban Development
IBTS	Institute for Building Technology and Safety
DAPIA	Design Approval Primary Inspection Agency
IPIA	Production Inspection Primary Inspection Agency
SAA	State Administrative Agency
ANSI	American National Standards Institute
ASCE	American Society of Civil Engineers
ASTM	American Society for Testing and Materials
NEC	National Electrical Code
NFPA	National Fire Protection Association
NMHCSS	National Manufactured Housing Construction and Safety Standards Act of 1974
OSHA	Occupational Safety and Health Act
FBC	Florida Building Code
DCA	Department of Community Affairs
HSMV	Department of Highway Safety and Motor Vehicles
DMV	Division of Motorist Services
DOT	Department of Transportation
FEMA	Federal Emergency Management Agency
FNMA	("Fannie Mae") Federal National Mortgage Association
FHA	Federal Housing Administration
VA	Veterans Administration
PSF	Pounds per square foot

Permits

A building permit issued by the local building authority must be obtained prior to the installation of any new or used mobile/manufactured home. Check with the local authority having jurisdiction to determine if permits are required to be obtained before moving a home onto the property where the home will be installed. The building permit shall include, but not limited to a drawing of all block pier locations and foundation or footer dimensions and the soil load bearing capacity at the installation site. *See the next two pages.*

An installer must know the requirements of each county or city where they will be installing homes. Many of the municipalities require the plumbing, electrical and any heating and air conditioning on one permit making the installer the "contractor of record". If an installer's permit has these items on the permit, the installer is responsible for all work listed on the permit.

Warranty

Florida Statute requires a 12 month warranty on the correct installation of a mobile/manufactured home starting from the date the certificate of occupancy is issued. Warranty items include installation and weather sealing, including sealing the bottom board, to prevent air infiltration of the home and the mobile/manufactured home must maintain a constant level. Electrical and plumbing are also covered by state warranty.

Designate location of all lateral arms and longitudinal stabilizing devices on the blocking plan.

Blocking Plan

typical single wide blocking plan

Lateral Arm

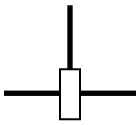

Longitudinal Stabilizing Devices

Manufacturer _____
Length x width _____

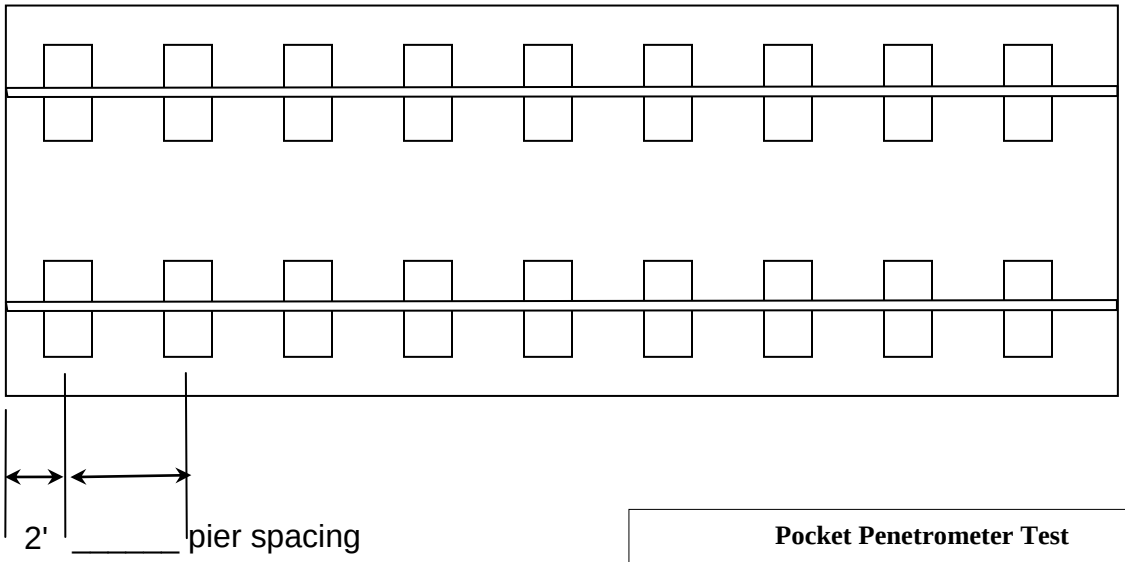

Pocket Penetrometer Test

Test the perimeter of the home at 6 locations. Take the reading at the depth of the footer. Using 500lb increments, take the lowest reading and round down to that increment.

Pocket Penetrometer test results _____
Soil torque probe test results _____
Anchor Length _____
I-beam pier pad size _____
Perimeter pier pad size _____

Other information

_____
_____
_____
_____
_____
_____
_____

Designate location of all lateral arms and longitudinal stabilizing devices on the blocking plan.

Lateral Arm

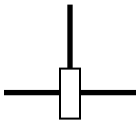

Longitudinal Stabilizing Devices

Blocking Plan

typical double wide blocking plan

Length x width _____
Manufacturer _____

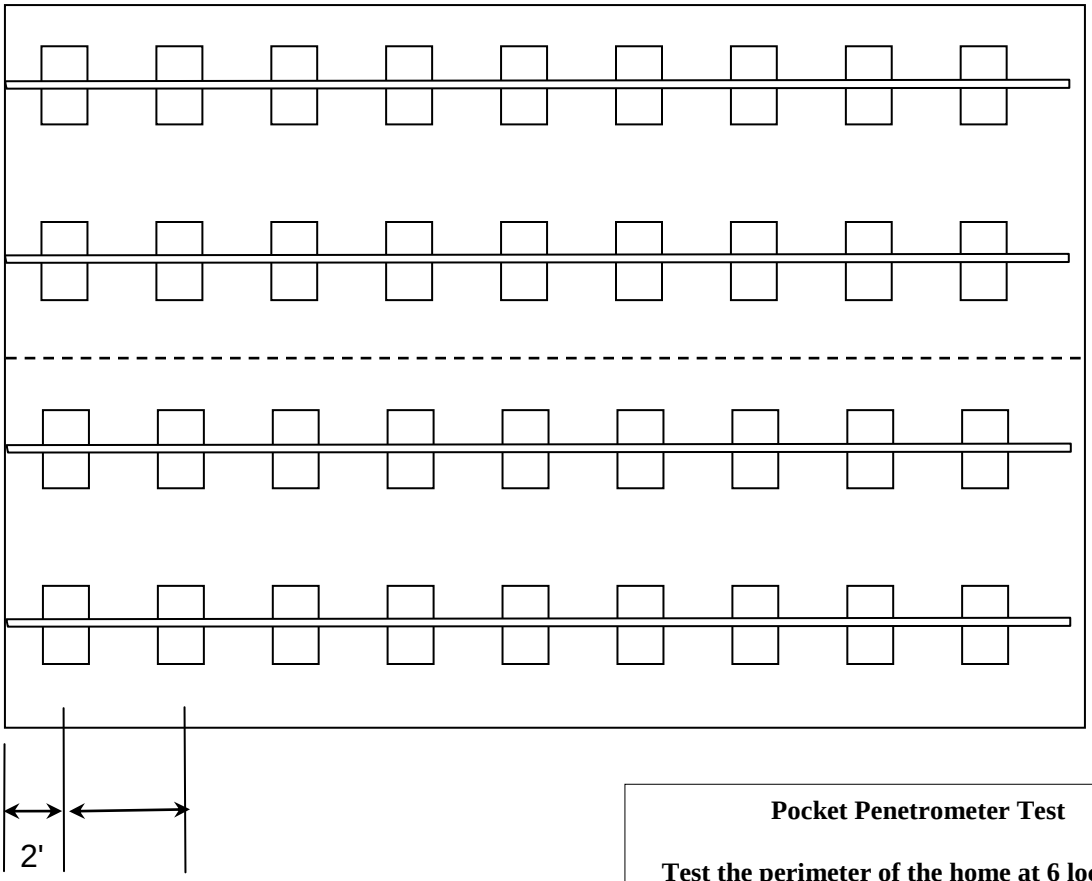

Marriage Wall the location of these piers will vary with each floor plan.

_____ pier spacing

Pocket Penetrometer Test

Test the perimeter of the home at 6 locations. Take the reading at the depth of the footer. Using 500lb increments, take the lowest reading and round down to that increment.

Soil Bearing _____
Soil torque probe test results _____
Anchor Length _____
I-beam pier pad size _____
Perimeter pier pad size _____
Marriage wall pier pad sizes – outline pad locations on the centerline and show sizes below

1 _____ 4 _____
2 _____ 5 _____
3 _____ 6 _____

Other information

_____

_____

Permit Application Manufactured Home Installation – sample ***Page 1***

Permit # _____

Applicant _____ Name of Licensed Installer _____
Address _____ License # _____
_____ Installation Decal # _____

Manufacturer's Name_____ Wind Zone _____ New home ___ Used home ___
Number of Sections _____ Width _____ Length _____ Year _____ Serial # _____
Installation standard used: (check one) manufacturer's installation manual ___ Rule 15C-1 ___

SITE PREPARATION:

Site Graded and fill dirt compacted to 90% _____ - or - Page _____
Drain tile and sump pump to be installed _____ - or - Page _____
Describe any other site prep method to be used _____ Page _____
Organic material removed _____ Page _____
Site graded or prepared for adequate drainage _____ Page _____
A vapor barrier is required for new homes Page _____
I understand that a poorly prepared site can cause doors and windows to bind, mold and mildew to form in the home. Installer's initials _____

FOUNDATION:

Load bearing soil capacity (psf) _____ or assumed 1000 psf _____ Page _____
Footing type: plastic pad _____, 16 x 16 concrete footer _____, poured footer _____ Page _____
I-beam piers: O/C spacings _____ Foundation pad size _____ Page _____
Perimeter piers: locations _____ Page _____
Centerline pier locations _____ Page _____
Centerline piers: Number _____ Footer sizes _____ Page _____
_____
Special pier blocking: fireplace, bay windows, tubs, shear walls, etc, Yes ___ No ___ Page _____

TIE-DOWNS:

Torque probe reading _____ Declared 5 ft. anchors _____ Page _____
I understand a torque probe test can only be performed by a licensed installer.
Installer's initials _____
Anchor type: 4 ft. _____ 5 ft. _____ Page _____
Number of frame ties: _____ Spacing _____ Angle of strap _____ degrees Page _____
Number of vertical ties: _____ Page _____
Number of centerline anchors _____
Longitudinal straps/anchors _____or longitudinal stabilizing devices _____ Page _____
Manufacturer of longitudinal stabilizing devices _____ Page _____
Manufacturer of lateral arm systems (if used) _____ Page _____
A State approved lateral arm system is being used and the installer will follow both the home's installation manual and the lateral arm manufacturer's installation instructions.
5' anchors are required at all centerline tie points where the torque test reading is 275 or less and where the mobile home manufacturer may require anchors with 4000 lb holding capacity. Installer's initials _____

<u>CLOSE UP:</u>

Gasket:
I understand a properly installed gasket is a requirement of all new and used homes and condensation, mold, mildew and buckled marriage walls can be a result of a poorly installed or no gasket being installed. I understand a strip of tape will not serve as a gasket. Page _____
Installer's initials _____ Type gasket_____

Fasteners are required to secure multi-sections of homes together (roof, sidewalls, floor)

Fasteners:	Roofs	Type and size _____	Spacing _____	Page _____
	Endwalls	Type and size _____	Spacing _____	Page _____
	Floors	Type and size _____	Spacing _____	Page _____

Electrical:
Connect electrical conductors between sections of the home this includes the bonding wire. Installers are not allowed to connect electrical power to the home. Access panels are to be installed. Page _____

Plumbing:
Using the manufacturer supplied drain line drawing connect all sewer drains to an existing sewer tap or septic tank. Page _____
Connect the potable water supply to an existing water meter, water tap or other independent water system. Access panels are to be installed. Page _____

Weatherproofing:
Rule 15C-2 requires the complete weather sealing of the home.
Bottom board repair Page _____
Vinyl siding Page _____
Soffit and facia Page _____
Roof close up: Check the one that applies
Manufacturer's installation manual _____ Page _____
Rule 15C-1 _____ 30 gauge, 8" wide, galvanized metal strip centered over the peak and fasten with galv. roofing nails at 2" on center on both sides of the centerline.

Chimney:
Install extra length flue pipe, install and seal storm collar, chimney cap Page _____

<u>Home skirted:</u> Yes ___ No ___ Page _____
If skirted ventilation is required: (check one) Page _____
1 square foot for every 150 square feet of home (with no vapor barrier) ___
1 square foot for every 300 sq. ft. of home (suggested with vapor barrier) ___
Ventilated skirting ___

PRODUCT APPROVAL

All anchors, piers and tie-down components used in the installation of a mobile/manufactured home or park trailer shall be tested, listed and approved by the Florida Department of Highway Safety and Motor Vehicles, Bureau of Mobile Home and Recreational Vehicle Construction. Products approved by the Department are published in a pamphlet called "Approved Product List for Installation". The approved product list is also on Department's website: http://www.flhsmv.gov/mobilehome/

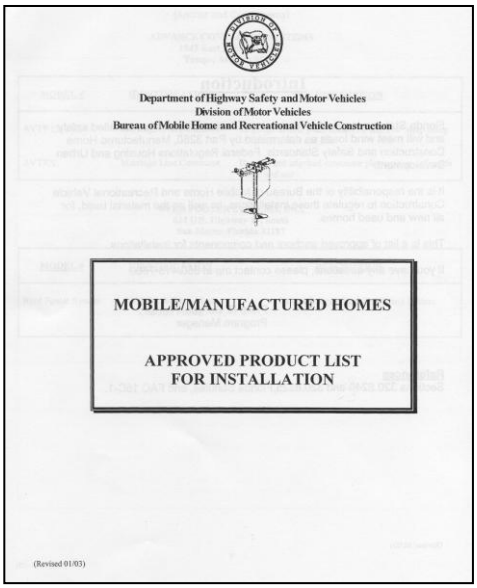
Department of Highway Safety and Motor Vehicles
Division of Motor Vehicles
Bureau of Mobile Home and Recreational Vehicle Construction

MOBILE/MANUFACTURED HOMES

APPROVED PRODUCT LIST
FOR INSTALLATION

(Revised 01/03)

Installation of anchors, piers and tie-down components shall be in accordance with the product manufacturer's installation instructions.

Manufactured load-bearing supports or devices shall be listed and approved for the use in which it was applied or piers shall be constructed as outlined in this rule.

Concrete products shall comply with the following specifications: Minimum dimensional and structural requirements for load-bearing solid and cell concrete blocks shall be to the Standard Specification for Load-Bearing Concrete Masonry Units, ASTM C-90, 1996 edition. Concrete foundations and cap blocks must have a minimum of two thousand two hundred (2,200) pound flexural strength as measured by Standard Test Method for Sampling and Testing Concrete Masonry Units, ASTM C140-96. Solid 4" concrete blocks are the minimum thickness of blocks that will meet this test.

Poured concrete shall be a minimum 2500 psi.

All plastic products shall be conditioned to ASTM D 618-61, reapproved 1990, Standard Practice for Conditioning Plastics and Electrical Insulating Materials for Testing. Plastics shall be tested to the following standards: ASTM D 790-92, Standard Test Methods for Flexural Properties of Unreinforced and Reinforced Plastics and Electrical Insulating Materials; ASTM D 732-85, Standard Test Method for Shear Strength of Plastics by Punch Tool and ASTM G 53-88, Standard Practice for Operating Light and Water Exposure Apparatus for Exposure of Nonmetallic Materials.

PRE INSTALLATION CONSIDERATIONS

Installers are responsible for complying with local requirements concerning zoning, fire limits or fire district, utility connection, and site preparation.

Wind Zones

Check the data plate, HUD label, or previous paperwork to determine the correct wind zone.

Visit the job site

An installer must visit the job site to check for access and soil conditions. Has the property been surveyed and set backs clearly marked for the home's proper placement? Has the right of way been cleared? Has the site been properly prepared? Local laws regarding encroachments in streets, yards and courts must be obeyed.

Access for Transporter

Before attempting to move a home, ensure that the transportation equipment and home can be routed to the installation site. You may encounter ditches, trees, overhead power lines and sharp turns.

Check soil conditions

A pocket penetrometer test is necessary to determine the pier pad size and pier spacing. A torque probe test is required to determine anchor lengths. While performing the torque probe test you may realize clay or some type of hard pan will make it extremely difficult to get the anchors into the ground. These types of information are needed to properly fill out the permit to install the home.

Fire Separation

Separation from adjacent structures and lot lines is based on the fire resistance rating of the home. Check with your local building departments for the requirements.

Florida Fire Marshal requirements are 10 ft, side to side; 8 ft, end to side; and 6 ft, end to end.

Flood Zones

Check with the local building department for flood zones.

Safety

See the next two pages.

SAFETY

Why OSHA regulations?

Why license installers?

Why does Florida not allow homeowners to install their own homes?

Please refer to your OSHA handout.

UNITED STATES DEPARTMENT OF LABOR

OSHA

Excerpts for Florida Mobile Home Installers
(set-up & tie-down)

Work Place Safety

Some of the Occupational Safety and Health Administration requirement for job site safety.

Title 29--Labor
CHAPTER XVII
PART 1926--SAFETY AND HEALTH REGULATIONS FOR CONSTRUCTION

OSHA.GOV

Cribbing
The most important thing you can do for jobsite safety.

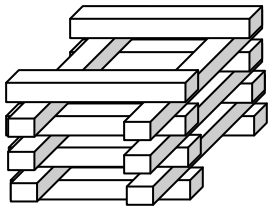

TOP VIEW

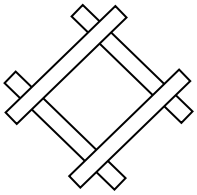

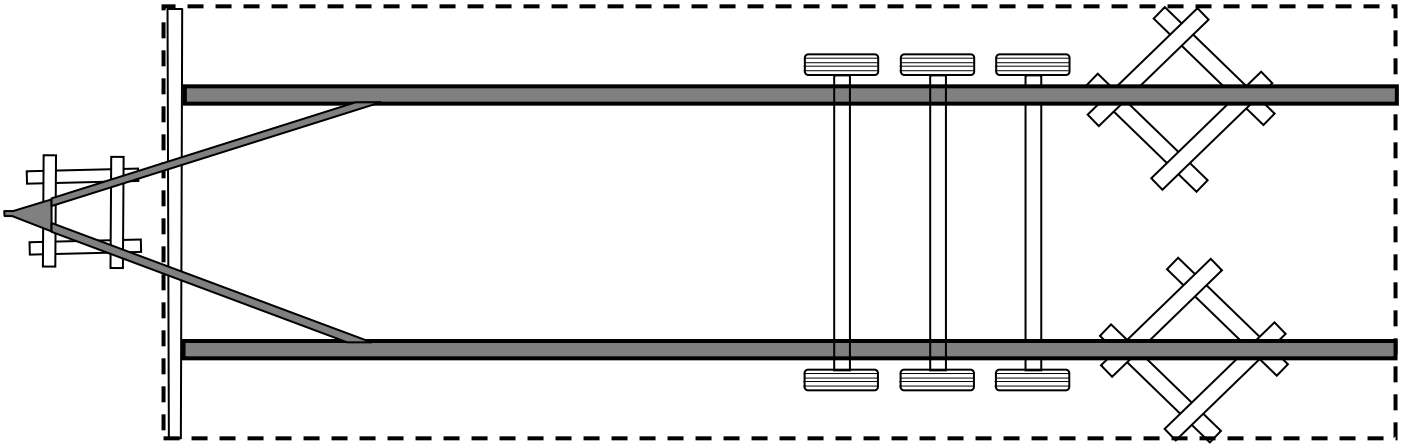

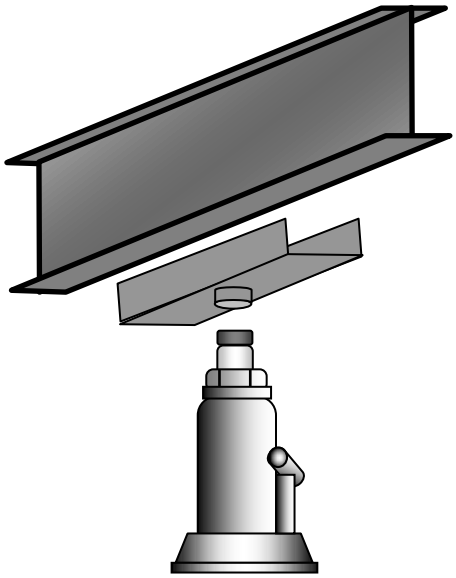

Jacking Plate
Another safety devise
Prevents jack from slipping off I-beam.
Prevents bending of the I-beam.

SITE PREPARATION

F.A.C. Rule 15C-1.0102(1) requires the installation of all new and when available used homes to be installed to the manufacturer's installation instructions.

Site prep and site drainage

Used Homes
F.A.C. Rule 15C-1.0102(3) - The area beneath and around the home shall be graded, sloped or properly drained so that water will not accumulate under the home. Vegetation and organic materials must be removed.

New Homes - To help prevent settling or sagging, the foundation must be constructed on firm, undisturbed soil or fill compacted to at least 90 percent of its maximum relative density. All organic material such as grass, roots, twigs and wood scraps must be removed in areas where the footing are to be placed. Drainage must be provided to direct surface water away from the home to protect against erosion of foundation supports and to prevent water build-up under the home. The home site must be graded or other methods, such as a drain tile and automatic sump pump systems must be provided to remove any water that may collect under the home. All drainage must be diverted away from the home and must slope a minimum of one-half inch per foot away from the foundation for the first ten feet. Where property lines, walls, slopes or other physical conditions prohibit this slope, the site must be provided with drains or swales or otherwise graded to drain water away from the structure. The home, where sited, must be protected from surface runoff from the surrounding area. If gutters and downspouts are installed the runoff must be directed away from the home.

The installer is responsible for site preparation even when a homeowner pulls the permit. You must never install any home where water may run under or accumulate under the home. Rain water must be channeled away from the home. A dirt pad is the best way to be assured of rain water being properly channeled away from the home.

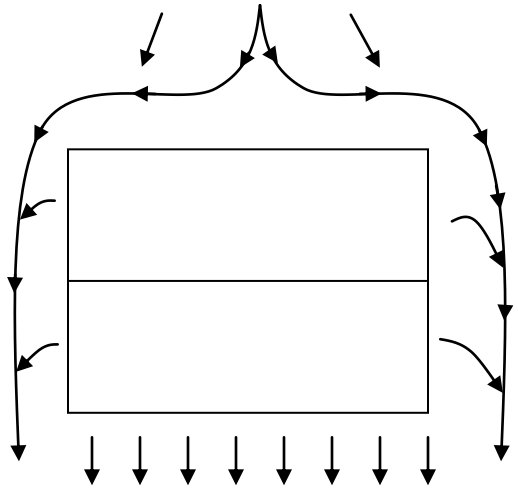

Rain water must be diverted away from the home.

Site Preparation

Always crown and grade site to slope away from the home. The best way is to make a dirt pad under the home.

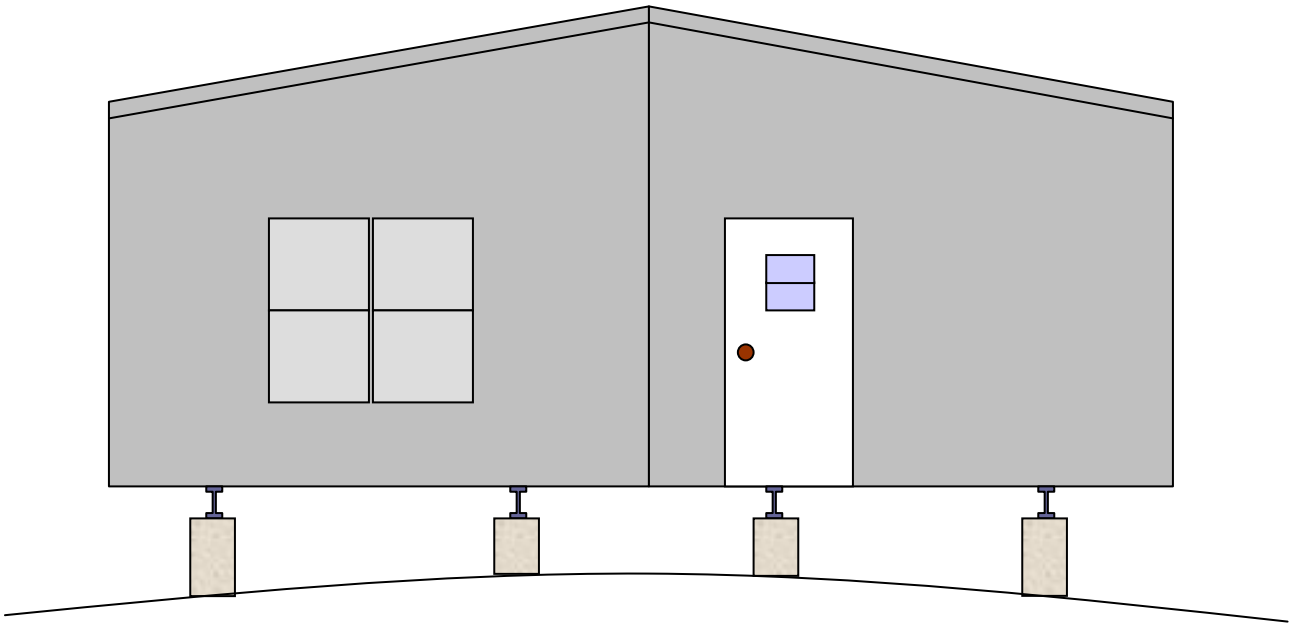

Home on a dirt pad.

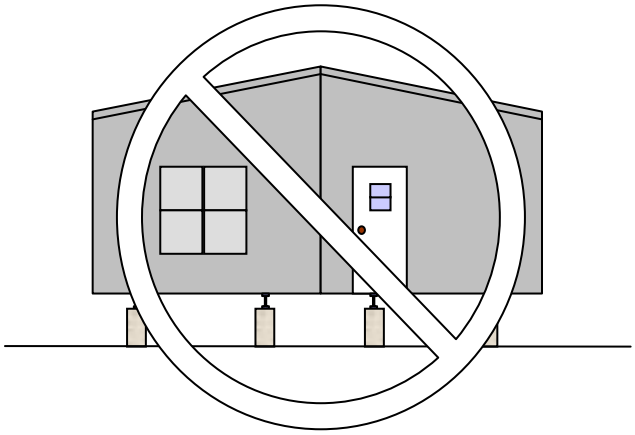

Do not install a home on level ground.

or

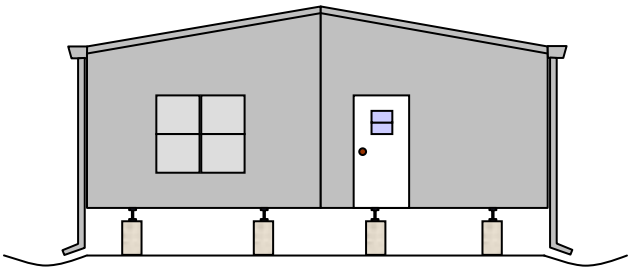

A bulldozer may have to dig swales and gutters added to channel water away from the home.

Site Preparation

Never install a home on a slope without proper site preparation. Homes installed on a slope will require a dirt pad under the home and possible swales and gutters to prevent water from running under the home. Any rain water running under the home will eventually undermine piers and/or cause the home to settle unevenly.

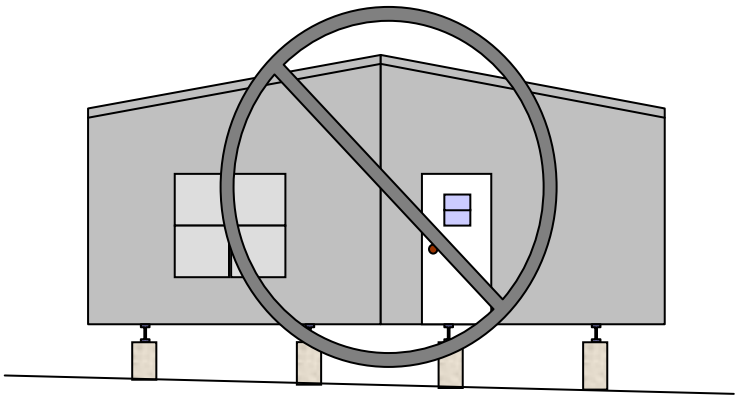

Home on a slope with no site preparation.

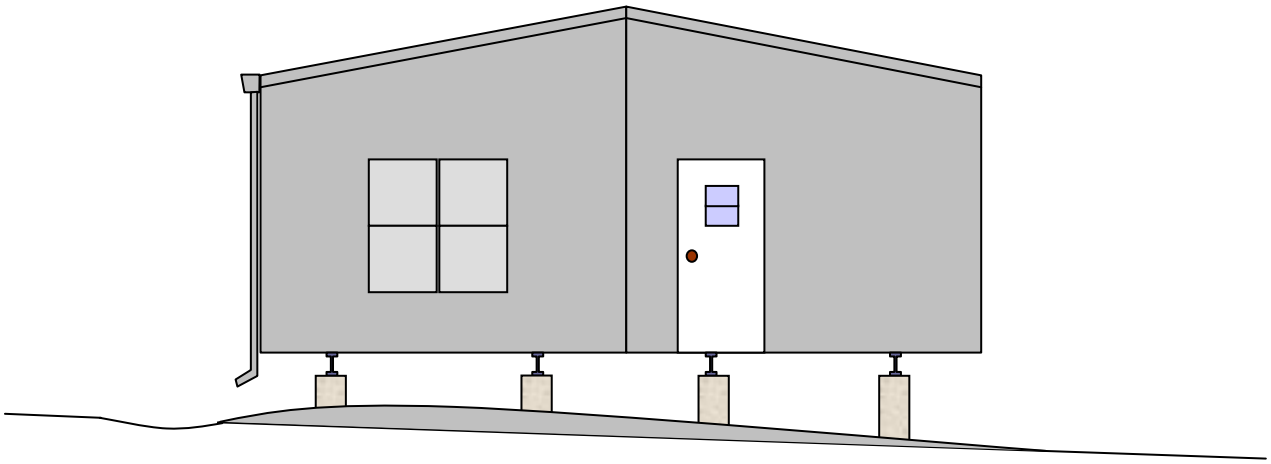

Home on a slope with a dirt pad and a swale to channel water away for the home.

Site Preparation – ***Vapor Barriers***

Excessive moisture under the home may cause structural damage and other moisture related problems, including mold and mildew, which could be hazardous to health.

Manufacturers require vapor barriers under manufactured homes if the home is to be enclosed with skirting or other materials. (HUD requirement)

A minimum of six mil polyethylene sheeting or its equivalent must be used. HUD does not specify a color for the polyethylene sheeting.

The entire area under the home must be covered with the vapor barrier, except for areas under open porches, decks, and recessed entries.

Joints in the vapor barrier must be overlapped at least 12 inches.

The vapor barrier may be placed directly beneath footings, or otherwise installed around or over footings placed at grade, and around anchors or other obstructions.

Any voids or tears in the vapor barrier must be repaired. Follow the manufacturer's installation for proper repair methods.

It is recommended that *used homes* have vapor barriers installed; however, Rule 15C does not address the issue.

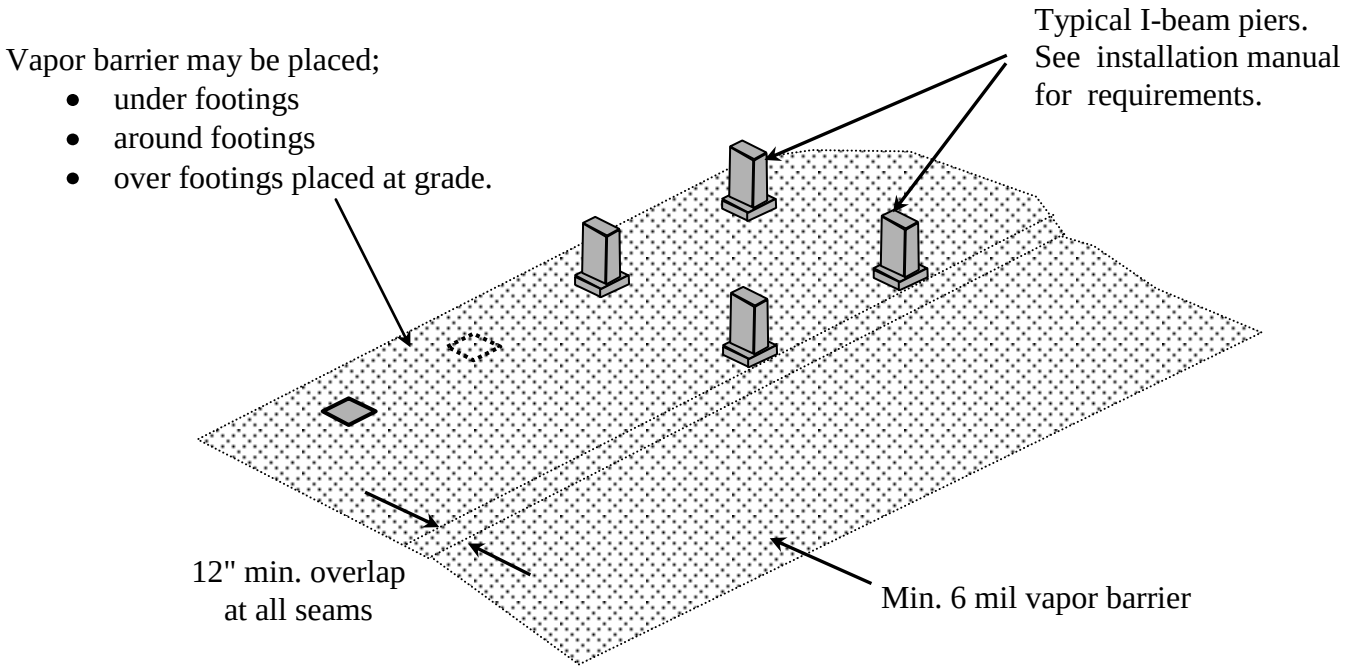

SOIL CONDITIONS

Two aspects of soil conditions need to be considered in the installation of manufactured homes.

1. How much the soil will bear?
2. How much the soil will hold?

Soil bearing is always measured in pounds per square foot (psf) and a pocket penetrometer can be used to measure the psf.

Soil holding power is measured in inch pounds and a torque probe test can be used to measure the inch pounds.

The next few pages will cover the soil bearing.

SOIL BEARING

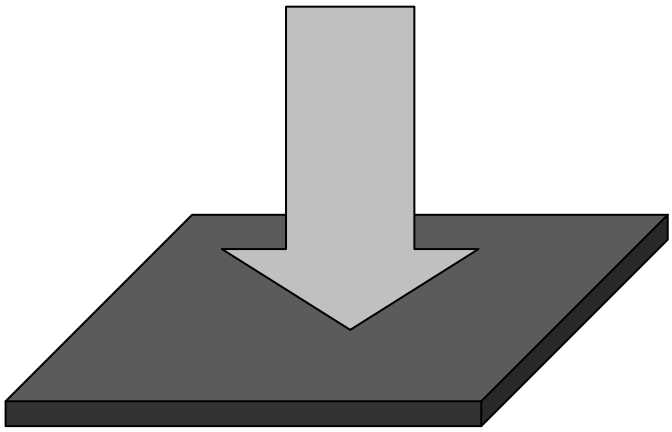

SOIL HOLDING

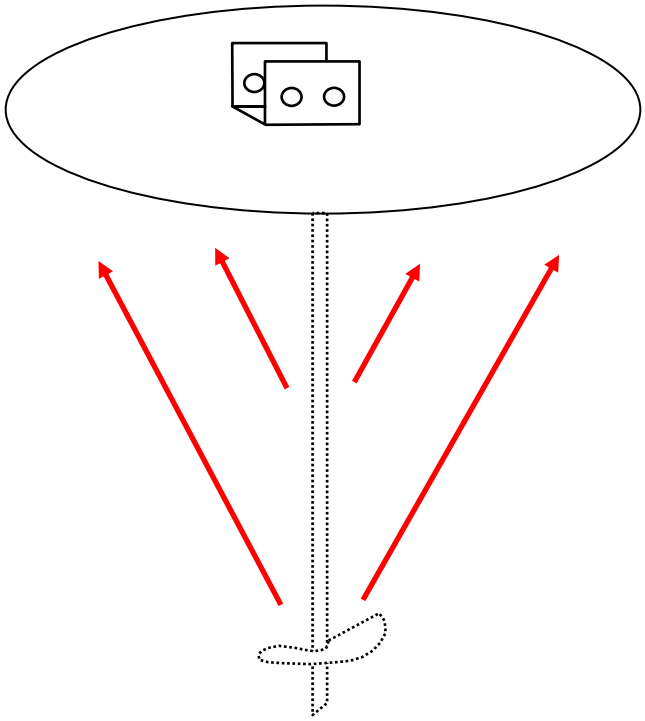

SOIL BEARING

POCKET PENETROMETER

The pocket penetrometer may be used to determine the soil bearing capacity (psf) of the soil or hire a professional soil testing firm to perform a blow count.
Soil bearing readings will always be rounded to the nearest 500 pound increment. In other words, 1000, 1500, 2000, etc. You may never "round up" the reading because it will show the soil being able to hold more weight than the test reading. You must "round down". Pocket penetrometers measure the soil in tons per foot.

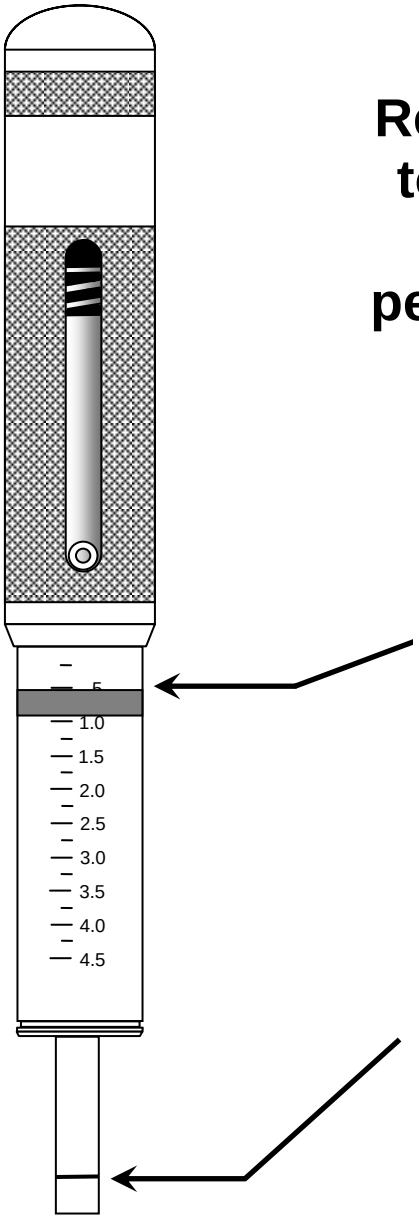

Remember the readings are in tons per foot, so the reading shown on this pocket penetrometer is .5 which is 1/2 ton which is 1000 pounds.

Take the reading from the slide ring's edge closest to the handle.

Press the end into undisturbed firm soil to the red line

SOIL BEARING, continued

POCKET PENETROMETER

Pocket Penetrometer Test

1500 **1000** **1250**

Test the perimeter of the home at 6 locations

Take the reading at the depth of the footer

Using 500 lb increments, take the lowest reading and round down to that increment.

2000 **1500** **1000**

This site rounded down to 1000 PSF

SOIL BEARING, continued

For our purpose, soil bearing is simply how much weight may be applied to a foundation pad or footer without the pad being either warped or depressed into the ground.

Used Homes **-** Soil bearing is always shown as pounds per square foot (psf) and the charts and/or graphs in Rule 15C and in manufacturer's installation manuals will show soil bearings in pounds per square foot. The minimum soil bearing allowed in Rule 15C is 1000 pound soil. This simply means that 1000 pounds could be put on a one square foot foundation pad or footer without the pad either warping or being depressed into the ground.

►***Florida over ride***◄
New Homes – HUD allows a minimum soil bearing of 1500 pound soil bearing. In Florida you may not declare 1500 psf soil without a pocket penetrometer test.

Soil bearing will need to be determined so the weight of the home can be successfully transferred to the ground. Failure to do so will cause roof sag, spongy floors, floor squeaks and windows/doors that are hard to open or will not open. A home set properly will never loose its level.

You must determine the correct soil bearing capacity.

The more dense the soil the more weight it will hold.

WEIGHT OF HOME
TRANSFERRED TO THE
GROUND UNDERNEATH THE HOME

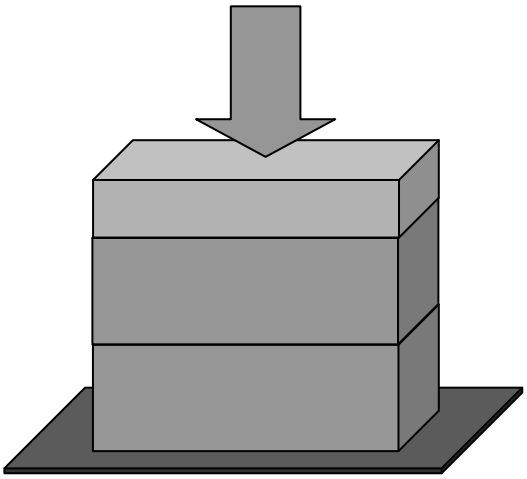

Foundations and Foundation Sizes

The smallest foundation pad size allowed in Florida is a 16" X 16" pad. This pad may be either concrete or an approved plastic pad. Plastic foundation pads come in a variety of sizes.
The foundation pad size will determine the amount of weight that can be applied to the pad and will determine the I-beam pier spacing. See page 41.

Pier spacing and footer sizes are always given either in Rule 15C-1 and/or in the manufacturer's installation manual. All pads are to be installed on firm stable soil to a depth equal to their height, except on clean compacted soil.

Piers are to be centered on the foundation pad with no exceptions (always follow the manufacturer's installation instructions).

On new homes, installers are required to set the home to the manufacturer's installation manual as it relates to piers and foundation footers. Florida requires piers at each end of the home on the centerline whether or not the manufacturer requires them. ►***Florida over ride***◄

On used homes refer to the Pier Spacing Table for foundation sizes. Remember, the more dense the soil the more weight the soil will bear.

Wood foundations are not allowed in the State of Florida. ►***Florida over ride***◄

Two main factors govern foundation size: the soil bearing and the size of the pad.

Foundations and Piers

Foundations, piers or other load bearing supports or devices shall be installed and constructed to evenly distribute the loads. Steel piers with mechanical adjustments shall be securely attached to the frame of all mobile/manufactured homes or park trailers. (See Figure C in Rule 15C-l.0103) Manufactured load-bearing supports or devices shall be listed and approved for the use in which it was intended, or piers shall be constructed as outlined in this rule.

A concrete block is designed to have a load of up to 8000 pounds. When loads are over 8000 pounds a pier will have to be double blocked and interlocked.

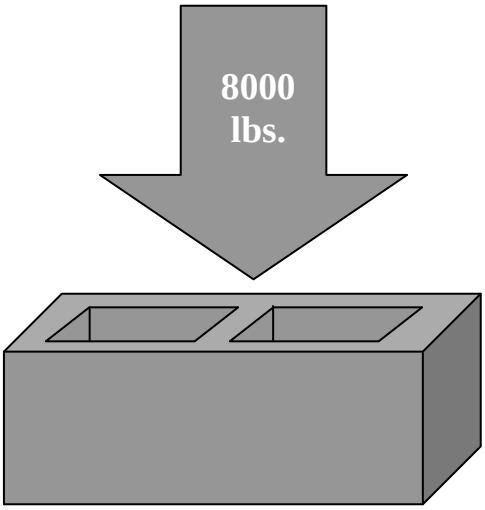

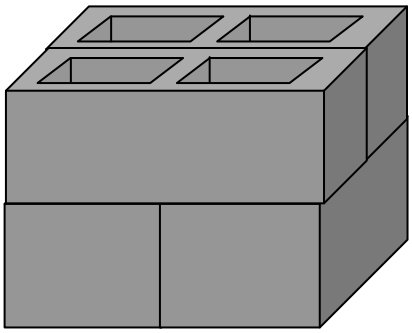

Sample plastic pad manufacturer's installation instructions

Installers are required to follow the installation instructions from each plastic pad manufacturer's installation instructions.

Foundation Pads

from...

TIE DOWN ENGINEERING

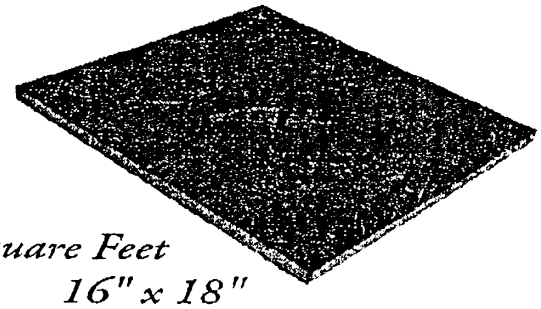

CAD designed with over a million calculations to provide a better plastic pad.

2 Square Feet
16" x 18"

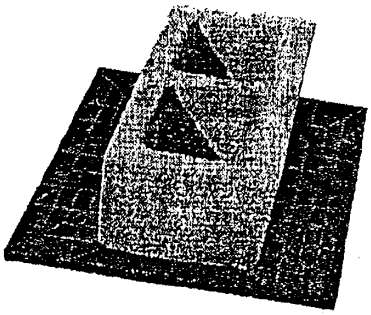

GENERAL INSTRUCTIONS

1. The ground under the pad must be leveled as smooth as possible. Remove all vegetation from under the pad.
2. All pads are to be installed flat side down with the ribbed side facing up.
3. Pier and pad placement is determined by the instructions from the manufactured home's manufacturer, or any local or state codes.
4. Use a pocket penetrometer to determine soil bearing capacity.
5. Center single block on pad so that there is approximately one inch of pad showing on each end of the block, and four inches on each side of the block. Double block sets should have one inch of pad showing at the ends of the blocks and be even with the pad on the sides.

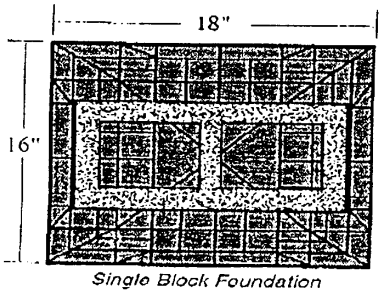

Single Block Foundation

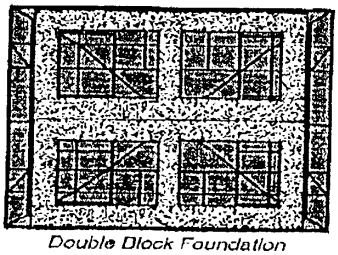

Double Block Foundation

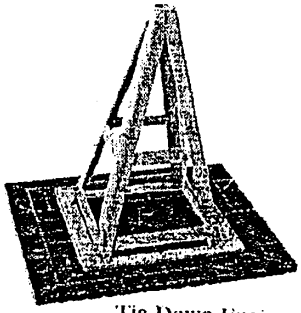

Tie Down Engineering, I
Job #98-1730
June 5, 1998
Page #22

For further information, contact Tie Down Engineering at 404-344-0000

Sample plastic pad manufacturer's installation instructions

Installers are required to follow the installation instructions from each plastic pad manufacturer's installation instructions.

MANUFACTURED HOUSING FOUNDATION SYSTEMS

Installation Instructions for ABS Pads

26" x 26" Pad Configuration

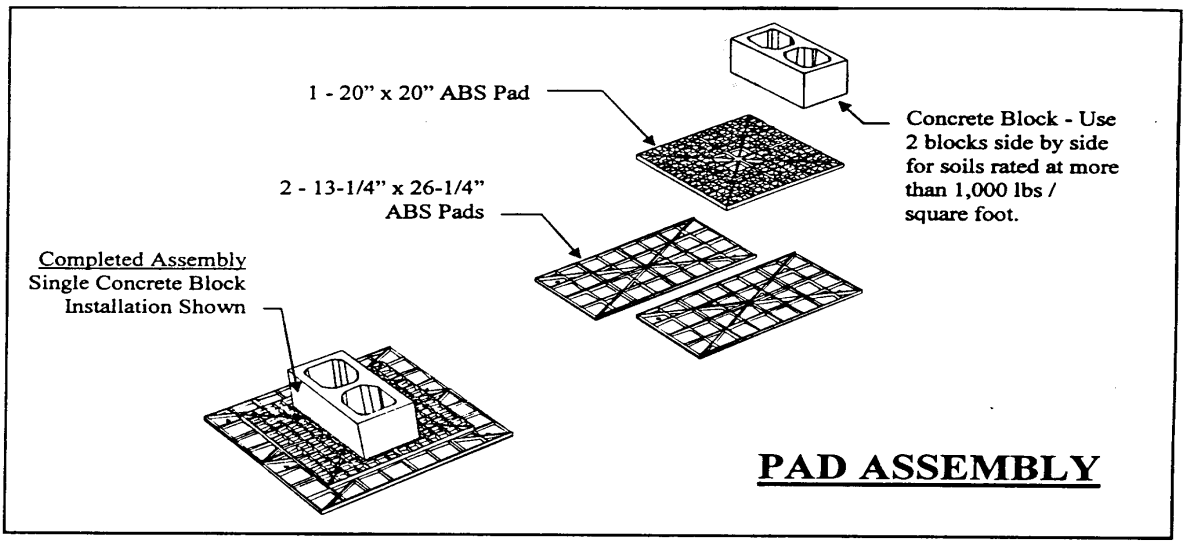

ABS PAD TYPES:

Type 1	13-1/4" x 26-1/4" Pad [2 used]	2.395 square feet	ID #4148-4
Type 2	20" x 20" Pad [1 used]	2.777 square feet	ID #1055-7

GENERAL INSTRUCTIONS

1. All pads are to be installed flat side down, ribbed side up.
2. The ground under the pads should be leveled as smooth as possible with all vegetation removed. Pads to be placed on natural grade unless otherwise permitted by the local building authority.
3. Pier & pad spacing will be determined by the manufactured home manufacturer's written set-up instructions.
4. The open cells between the ribbing on the upper side of the pads may be filled with soil or sand after installation to prevent any accumulation of stagnant water in the pads.
5. A pocket penetrometer may be used to determine the actual soil bearing value. If soil testing equipment is not available, use an assumed soil value of 1000 lbs/square foot.
6. All pad sizes shown are nominal dimensions and may vary up to 1/8"
7. The maximum deflection in a single pad is 5/8" measured from the highest point to the lowest point of the top face.
8. In frost areas, a 6" deep gravel base installed in well drained, non frost susceptible soil is recommended.

MAXIMUM PIER LOAD IN POUNDS:

Number of Concrete Blocks	Soil Bearing Value	Maximum Allowable Load
1	1,000 lbs. / square foot	4,800 lbs.
2	2,000 lbs. / square foot and greater	9,600 lbs.

Manufactured Housing Foundation Systems
Installation Instructions for ABS Pads - 26" x 26" Pad Configuration

Foundations and Foundation Sizes

Soil loads and pad bearing capacity

Since foundation pads come in a variety of sizes and to determine which one to use, an installer must perform a pocket penetrometer test to check for the pounds per square foot that the soil will bear.

Used Homes

To determine the correct pad size for certain soils use the Pier Spacing Table in Rule 15C-1. See page 51.

As an aid to installers a chart has been interpolated from Rule 15C-1 pier spacing table and is located on page 41.

New Homes

To determine the correct pad size for certain soils use the manufacturer's installation manual.

Manufacturers may give different factors for determining the loads on I-beams and centerlines. These loads may be given in square inches of pad size, or by weight or by the actual pad size.

Manufacturers will give installation instructions for the entire country.

Do not be confused the different roof loads – Florida's roof load is 20 psf.

Do not be confused with Wind Zone I – Florida is Wind Zone II and III.

Don not be confused with all of the psf ratings of the soil. You simply pick out the row or column that has the psf rating that matches your pocket penetrometer reading.

Reading and Understanding Manufacturer's Installation Instructions

A double wide is being installed and the width measures 25' 4" and has a centerline opening of 19'. The soil tested at 1500 psf. What size footer in square inches is needed?

PIER FOOTER SIZING CHART FOR MARRIAGE WALL OPENINGS							
		LOAD SPANS					
24' WIDE	SOIL BEARING CAPACITY PSF	8' – 12'	12' – 16'	16' – 20'	20' – 24'	24' – 28'	28' – 32'
	1000	390 sq. in	494 sq. in	597 sq. in	701 sq. in	805 sq. in	908 sq. in
	1500	260 sq. in	329 sq. in	398 sq. in	467 sq. in	536 sq. in	606 sq. in
	2000	195 sq. in	247 sq. in	299 sq. in	351 sq. in	402 sq. in	454 sq. in
	2500	156 sq. in	197 sq. in	239 sq. in	280 sq. in	322 sq. in	363 sq. in
	MIN. PIER CAP	2708 lbs.	3428 lbs.	4148 lbs.	4868 lbs.	5588 lbs.	6308 lbs

		LOAD SPANS					
25' 4" WIDE	SOIL BEARING CAPACITY PSF	8' – 12'	12' – 16'	16' – 20'	20' – 24'	24' – 28'	28' – 32'
	1000	409 sq. in	519 sq. in	628 sq. in	737 sq. in	847 sq. in	956 sq. in
	1500	273 sq. in	346 sq. in	419 sq. in	492 sq. in	565 sq. in	638 sq. in
	2000	205 sq. in	259 sq. in	314 sq. in	369 sq. in	423 sq. in	478 sq. in
	2500	164 sq. in	207 sq. in	251 sq. in	295 sq. in	339 sq. in	383 sq. in
	MIN. PIER CAP	2841 lbs.	3601 lbs.	4361 lbs.	5121 lbs.	5881 lbs.	6641 lbs

		LOAD SPANS					
26' 8" WIDE	SOIL BEARING CAPACITY PSF	8' – 12'	12' – 16'	16' – 20'	20' – 24'	24' – 28'	28' – 32'
	1000	482 sq. in	544 sq. in	659 sq. in	774 sq. in	889 sq. in	1004 sq. in
	1500	286 sq. in	362 sq. in	439 sq. in	516 sq. in	593 sq. in	670 sq. in
	2000	214 sq. in	272 sq. in	329 sq. in	387 sq. in	445 sq. in	502 sq. in
	2500	171 sq. in	217 sq. in	264 sq. in	310 sq. in	356 sq. in	402 sq. in
	MIN. PIER CAP	2975 lbs.	3775 lbs.	4575 lbs.	5375 lbs.	6175 lbs.	6975 lbs

Wind Zone III

Interpolation

Definition: Interpolate – to insert between other things or parts.

Interpolation

Installers will be required to interpolate when using manufacturer's installation manuals. An example would be as follows: I-beam pier spacings are given as 4 feet, 6 feet, and 8 feet.

Roof load zone and max. section width				
Maximum Support Spacing	South (20 psf)			
		12 ft	14 ft	16 ft
	4 ft	2410	2690	2960
	6 ft	3500	3920	4360
	8 ft	4600	5155	5740
	No perimeter blocking required.			

A 14 foot wide unit has an I-beam pier spacings at 4 feet and has a load of 2,690 pounds and a load of 3,920 pounds at a spacing of 6 feet. A spacing of 5 feet is needed. How do you figure the weight on 5 feet spacings?

Under the 14 ft. column, add the 4 ft. and 6 ft. weights. 2690 + 3920 = 6610 pounds.
Divide 6610 by 2 to get the answer. 6610 ÷ 2 = 3305
3305 is the weight at 5 ft. spacings.
A good way to remember is, "Add the two and divide by two."

Worksheet ***take a moment and figure the 5' and 7' spacings below.***

Roof load zone and max. section width				
Maximum Support Spacing	South (20 psf)			
		12 ft	14 ft	16 ft
	4 ft	2410	2690	2960
	5 ft			
	6 ft	3500	3920	4360
	7 ft			
	8 ft	4600	5155	5740
	No perimeter blocking required.			

Plastic pier footers

NOTE: *These charts do not supersede any Plastic Pier Pad manufacturer's installation instructions or manufactured home's installation manuals or Rule 15-C. This chart is designed to aid the installer in the use of plastic foundation pads.*

PAD SIZE, SOIL BEARING AND PIER SPACING FOR USED HOMES

Type	**APPROVED ABS PIER PADS**					SOIL BEARING							
						1000 psf		1500 psf		2000 psf		2500 psf	
	Pad Size			Sq In	Sq Ft	Weight	Spacing	Weight	Spacing	Weight	Spacing	Weight	Spacing
sq	16	X	16	256	1.778	1778	3' 0"	2667	4' 6"	3556	6' 0"	4444	7' 6"
sq	16	X	18	288	2.000	2000	3' 4"	3000	5' 8"	4000	6' 9"	5000	8' 0"
oval	16	X	18.5	288	2.000	2000	3' 4"	3000	5' 8"	4000	6' 9"	5000	8' 0"
sq	18.5	X	18.5	342	2.377	2377	4' 1"	3565	6' 0"	4753	8' 0"	5942	8' 0"
sq	13.25	X	26.25	348	2.415	2415	4' 1"	3623	6' 1"	4831	8' 0"	6038	8' 0"
sq	16	X	22.5	360	2.500	2500	4' 2"	3750	6' 4"	5000	8' 0"	6250	8' 0"
oval	17	X	22	360	2.500	2500	4' 2"	3750	6' 4"	5000	8' 0"	6250	8' 0"
sq	17	X	23	391	2.697	2697	4' 7"	4045	6' 10"	5394	8' 0"	6742	8' 0"
sq	20	X	20	400	2.778	2778	4' 8"	4167	7' 0"	5556	8' 0"	6944	8' 0"
sq	17.187	X	25.187	432	3.000	3000	5' 1"	4500	7' 7"	6000	8' 0"	8000	8' 0"
oval	17.5	X	25.5	432	3.000	3000	5' 7"	4500	7' 7"	6000	8' 0"	8000	8' 0"
sq	24	X	24	576	4.000	4000	6' 9"	6000	8' 0"	8000	8' 0"	8000	8' 0"
val	21.13	X	29.13	576	4.000	4000	6' 9"	6000	8' 0"	8000	8' 0"	8000	8' 0"
sq	26	X	26	676	4.694	4694	7' 11"	7042	8' 0"	8000	8' 0"	8000	8' 0"
oval	23.25	X	31.25	675	4.698	4698	7' 11"	7042	8' 0"	8000	8' 0"	8000	8' 0"

Configurations or Stacked Plastic Pads

In Florida plastic pads may only be stacked if listed in this chart.

PAD SIZE, SOIL BEARING AND PIER SPACING

APPROVED ABS PIER PAD CONFIGURATIONS					SOIL BEARING							
					1000		1500		2000		2500	
Two 13.25 x 26.25 square pads as a base and one square 20 x 20 pad on top												
26.5	X	26.25	689	4.785	4800	N/A	7200	N/A	9600	N/A	12000	N/A
Two 16 x 22.5 square pads as a base and one pad of the same size on top												
32	X	22.5	720	5.000	5000	N/A	7500	N/A	10000	N/A	12500	N/A
Two 17 x 22 oval pads as a base and one pad of the same size on top												
34	X	22	748	5.194	5194	N/A	7791	N/A	10388	N/A	12985	N/A
Two 17.187 x 25.187 pads as a base and one pad of the same size on top												
34.375	X	25.187	866	6.012	6012	N/A	9018	N/A	12024	N/A	15030	N/A
Two 17.5 x 25.5 oval pads as a base and one pad of the same size on top												
35	X	25.5	893	6.198	6198	N/A	9297	N/A	12396	N/A	15495	N/A

Pier construction

Rule 15C-1

Piers shall be centered under the I-beam and the first pier shall be within two feet (2') of either end of the home. The pier foundation shall be a minimum of 4" x 16" x 16" solid concrete pad precast or poured eight inch (8") minimum in place, or other material approved and listed by the department. Piers may be constructed of regular 8" x 8" x 16" concrete blocks, open cells, solid, or equivalent (with open cells vertical) centered on the footing or foundation. A 2" x 8" x 16" pressure treated, or other material approved and listed by the department, shall completely cover the top of the pier with pressure treated shims (¼" minimum and 1 ½" maximum thickness x 3 ½" minimum width x 6" minimum length) centered and driven tight from both sides of the I-beam between the wood plate or cap and the main frame. Single tiered block piers shall be installed perpendicular to the main I -beam. When a pier has been capped with at least a four inch (4") solid concrete block, or other material approved and listed by the department, one- fourth inch (¼") of wood stock or wood shims or other material approved and listed by the department, shall be installed between the pier and steel I -beam.

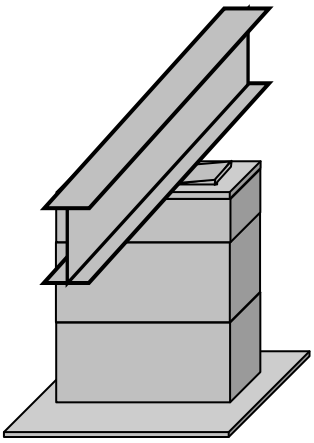

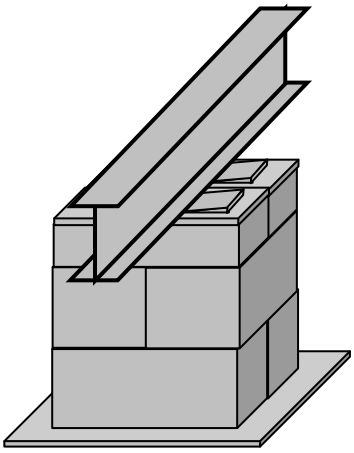

New Homes

HUD closely follows Florida's Rule 15C-1 with two exceptions. Shims must be a nominal 4 inch x 6 inch x 1 inch and can occupy no more than one inch of vertical height. Frame piers less than 36" high cannot lean more than 1/2 " and frame piers 36" to 67" cannot lean more than one inch.

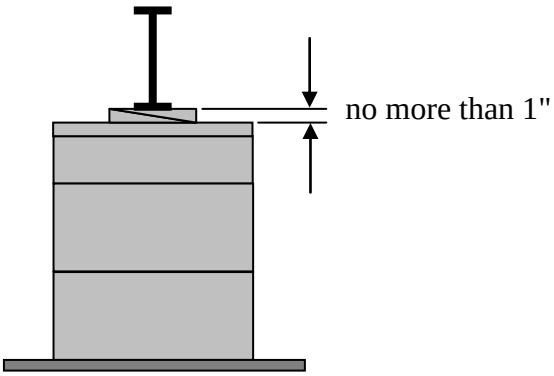

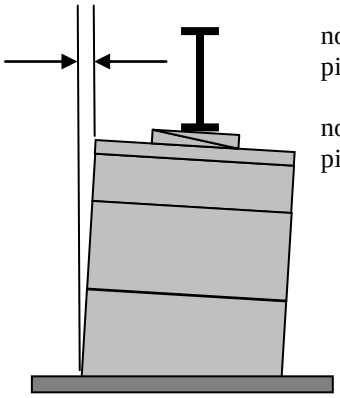

Pier construction

Manufactured Piers

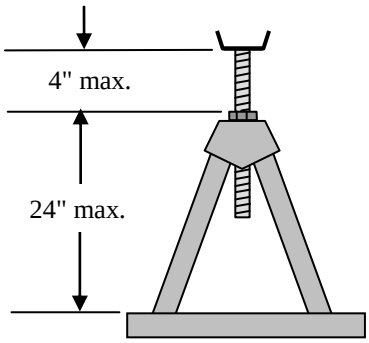

Manufactured piers (steel piers) shall be approved by the department and galvanized.

Used homes; the maximum mechanical height adjustment is 4".
New homes; the maximum mechanical height adjustment is 2".

Pier height – Single Stacked Piers

Rule 15C-1

Pier height is measured from top of footer or foundation to top of cement block stack, including 4" cap block(s). The pier height for single stacked block piers is 36" and corner piers are 24 ".

New Homes

The pier height for single stacked block piers is 36". Horizontal offsets from the top to the bottom of the pier must not exceed one-half inch.

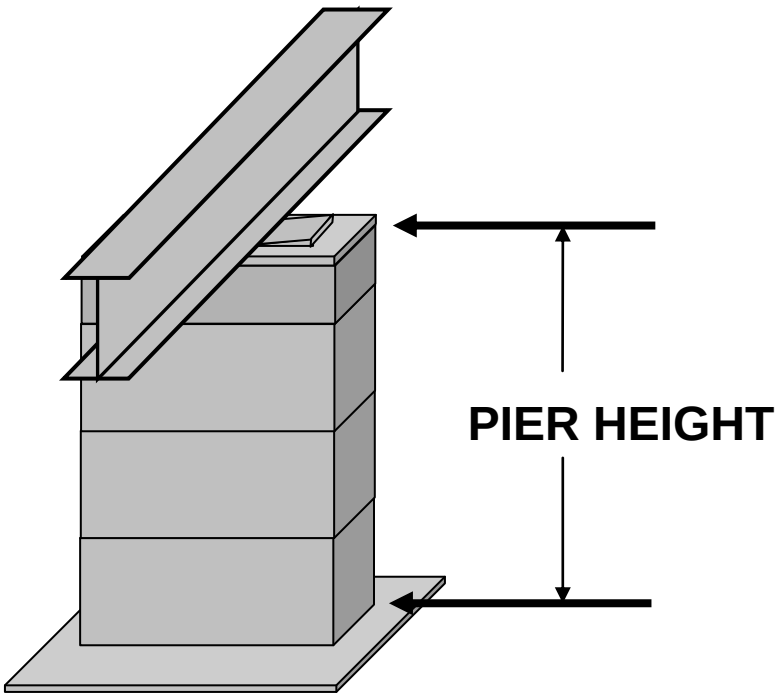

Pier construction

Pier height Double Stacked Piers

Rule 15C-1

Pier height is measured from top of footer or foundation to top of cement block stack, including 4" cap block(s). All piers over thirty-six inches (36") and corners piers over twenty-four inches (24") in height shall be double tiered with blocks interlocked and capped with two (2) 4" x 8" x 16" solid concrete blocks side by side and perpendicular to the I-beam, or other material approved and listed by the department and cushioned with wood shims or pressure treated plate. All piers over fifty-two inches (52") shall comply with local requirements.

New Homes

All frame piers between 36 inches and 67 inches high and all corner piers over 3 blocks high must be double tiered with blocks interlocked. Mortar is not required. Horizontal offsets from the top to the bottom of the pier must not exceed one inch.

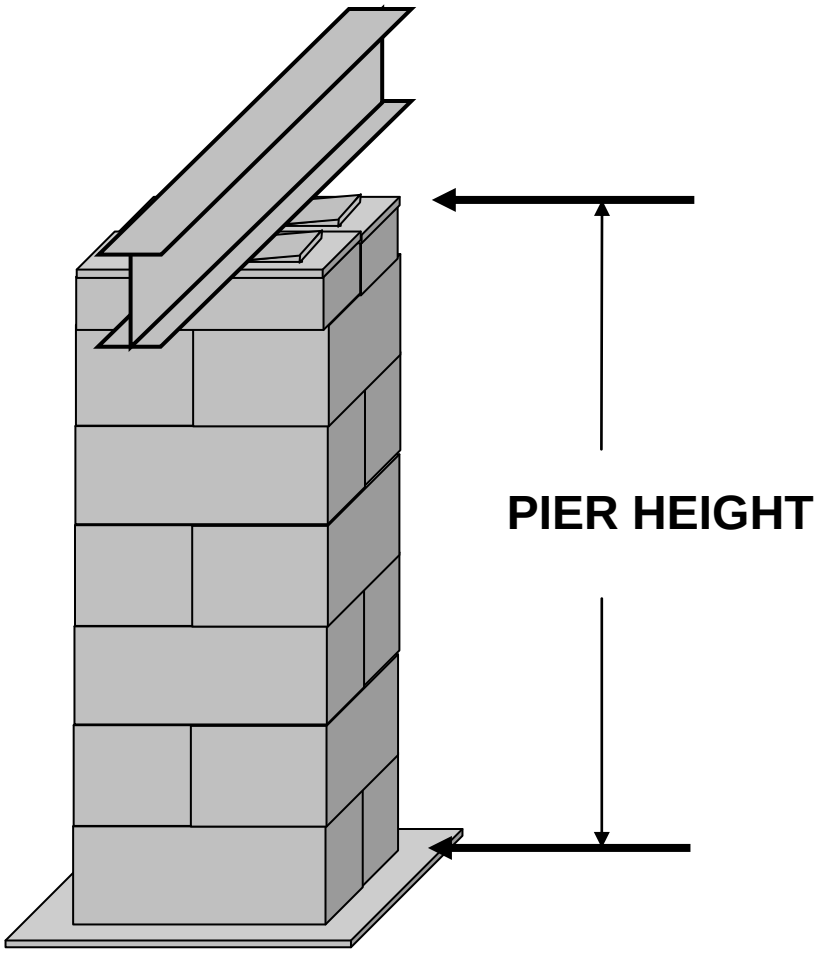

Pier construction

Cap Blocks

Concrete cap blocks must have a minimum of 2,200 pound flexural strength. Solid 4"concrete blocks are the minimum thickness that will meet this test. A 2" x 8" x 16" pressure treated or other material approved by the department, shall completely cover the top of the pier. Plastic cap blocks have been approved by the department.

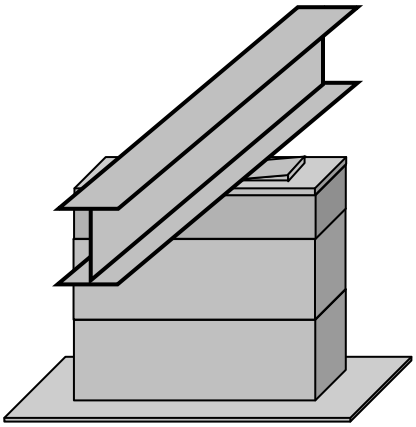

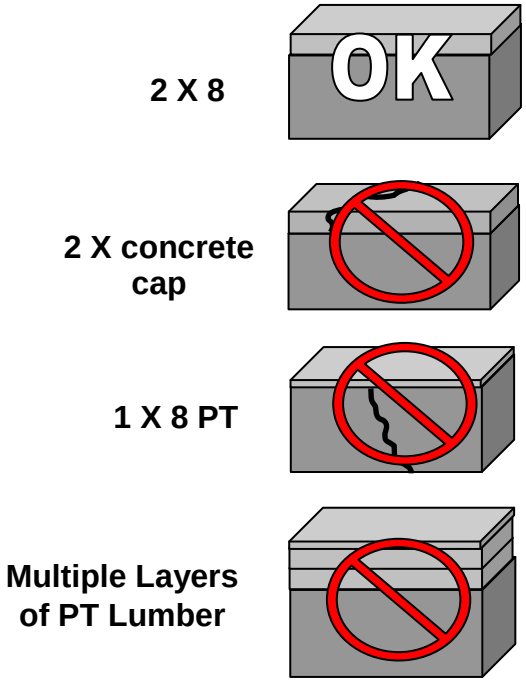

Shims

New Homes – 3 1/2" x 6" x 1" and can occupy no more than one inch in vertical height.
Used Homes – 3 ½ " x 6" x 1 ½" and should occupy no more than one and one half inches in height.

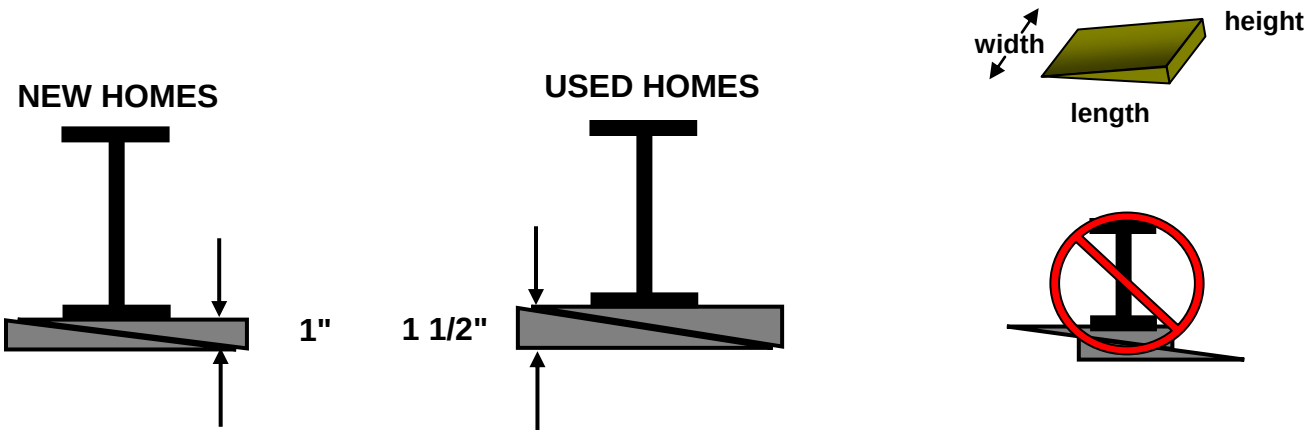

Pier construction

Clearance under homes

Rule 15C-1

The minimum distance between the finished grade (ground) under all new and used mobile/manufactured homes and the bottom of the I-beam shall be eighteen inches (18"). Where the grade is sloped, twenty-five (25%) of the lowest member of the main frame may be set below eighteen inches (18"); however, under no circumstances may the bottom of the I-beam be set below twelve inches (12") from the finished grade.

New Homes - ► ***Florida override*** ◄

HUD will allow (in other States) a minimum clearance of 12 inches that must be maintained between the lowest member of the main frame (I-beam) and the grade under all areas of the home.

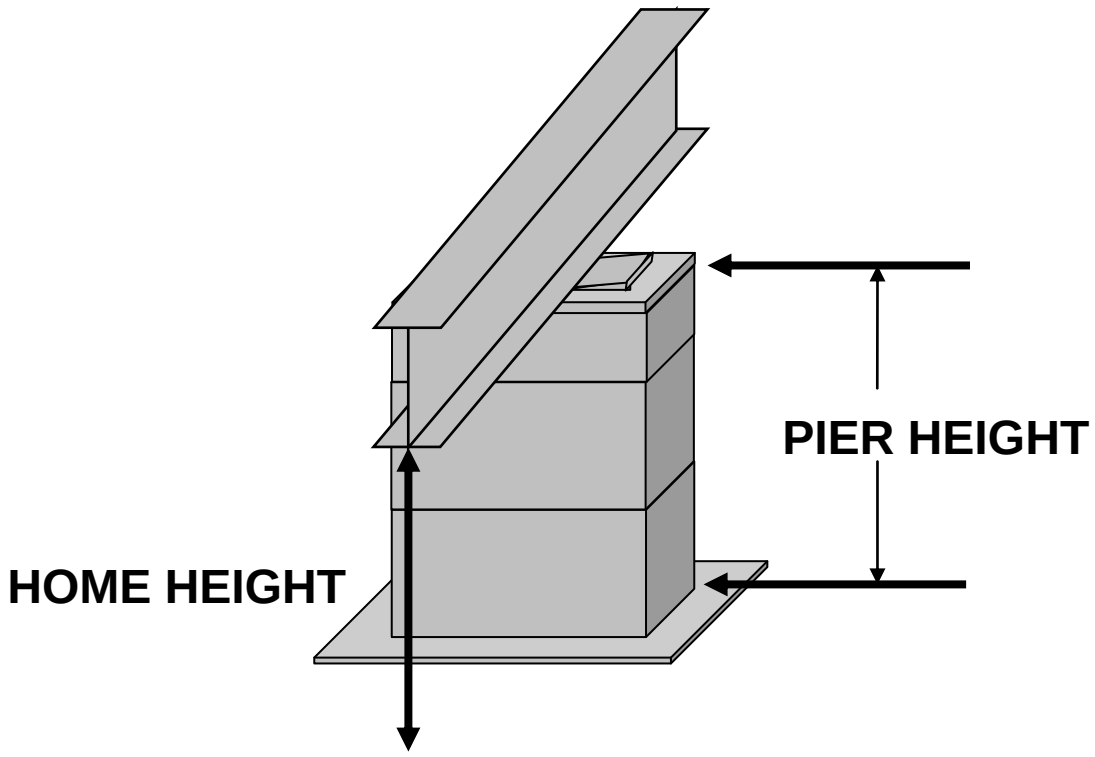

Pier construction

Frequently found pier violations

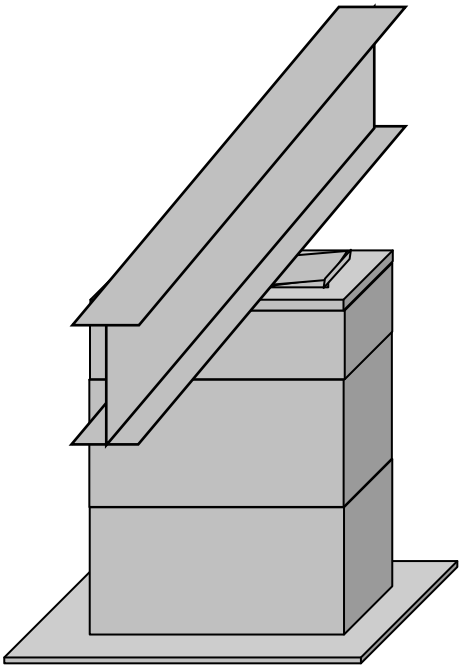

1. Plastic foundation pad size too small for I-beam spacing.
2. Pad size too small for a centerline opening.
3. Concrete blocks sit on the pad in the wrong direction.
4. Block piers are not perpendicular to the I-beam.
5. Block piers are not perpendicular to the centerline.
6. Block piers are not centered on the pad.
7. Pier is not centered under the I-beam.
8. Piers have settled and loose (not shimmed tight).
9. Blocks are chipped or cracked.
10. Cap blocks incorrectly sized or wrong materials.
11. More than 2" of wood for the cap blocks (used homes).
12. Shims incorrectly installed.
13. Missing piers within 2' of centerline end walls.
14. Centerline piers not positioned correctly at centerline openings.
15. Perimeter piers missing or misplaced at required locations on exterior walls.

The major difference between site built and mobile homes.

The location of the piers or stem walls of site built homes are on the outside edges of the home and mobile homes piers are located under the I-beams.

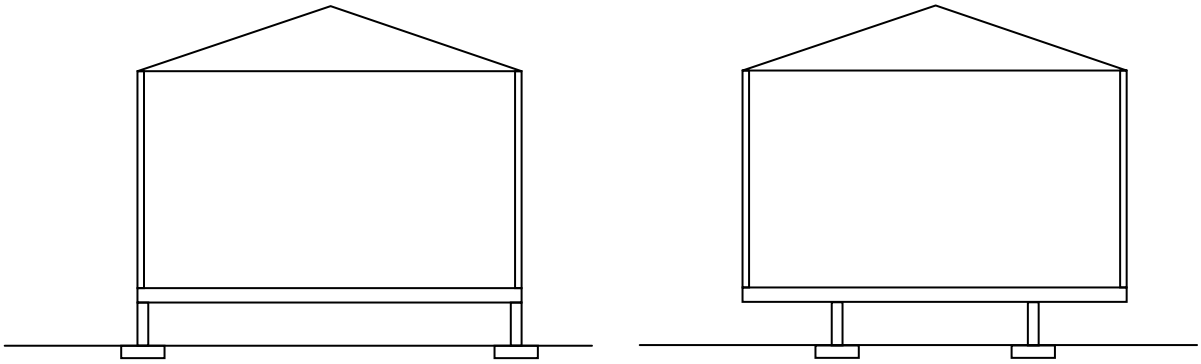

Column supports

Columns support post carry more loads than other framing members. Whether on the perimeter (exterior) of the home or on the centerline, column support post foundation pads will need to be closely figured to carry the correct loads. The loads will be supplied by the manufacturer's installation manual.

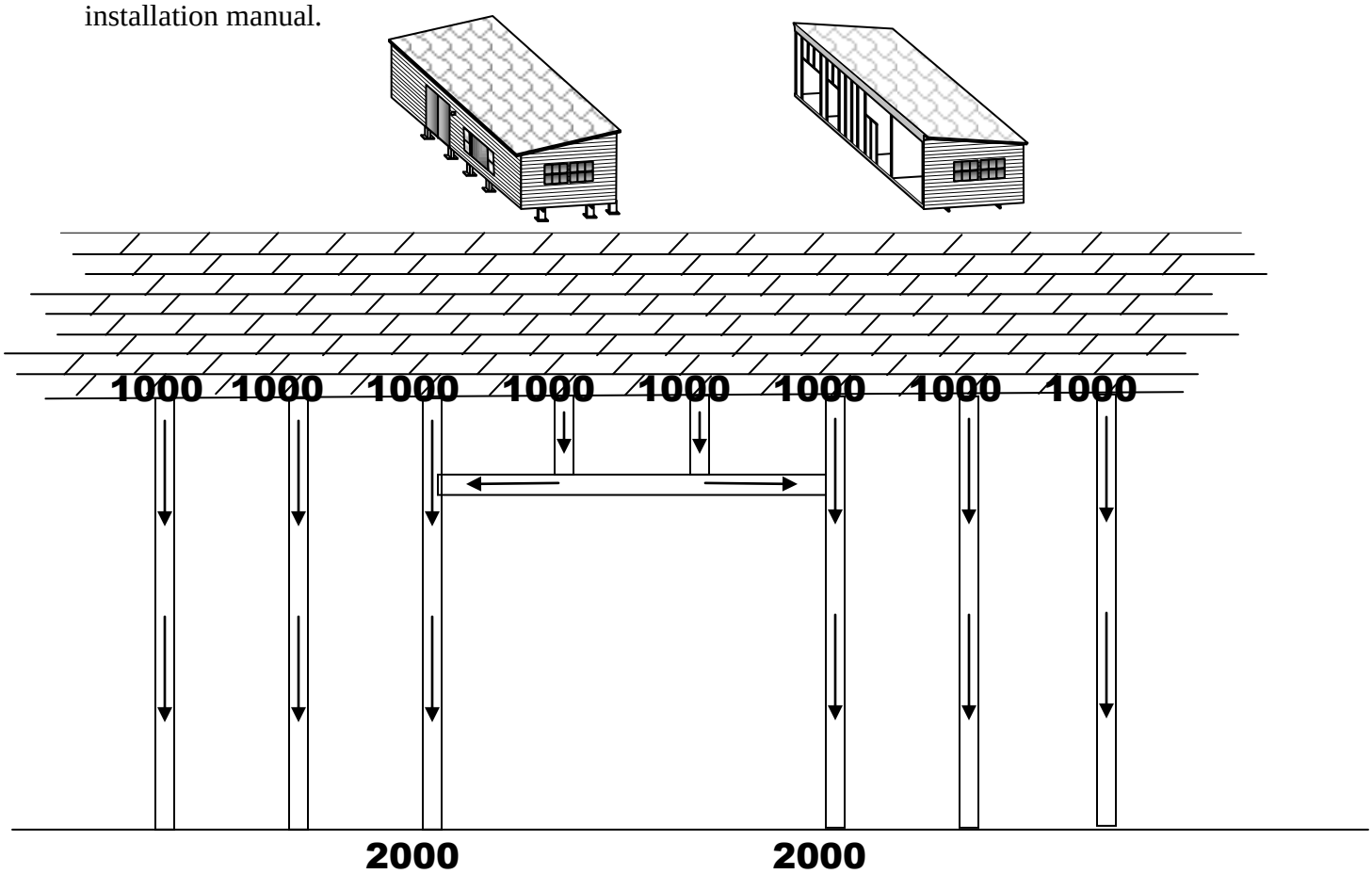

Transferring the home's weight to the ground

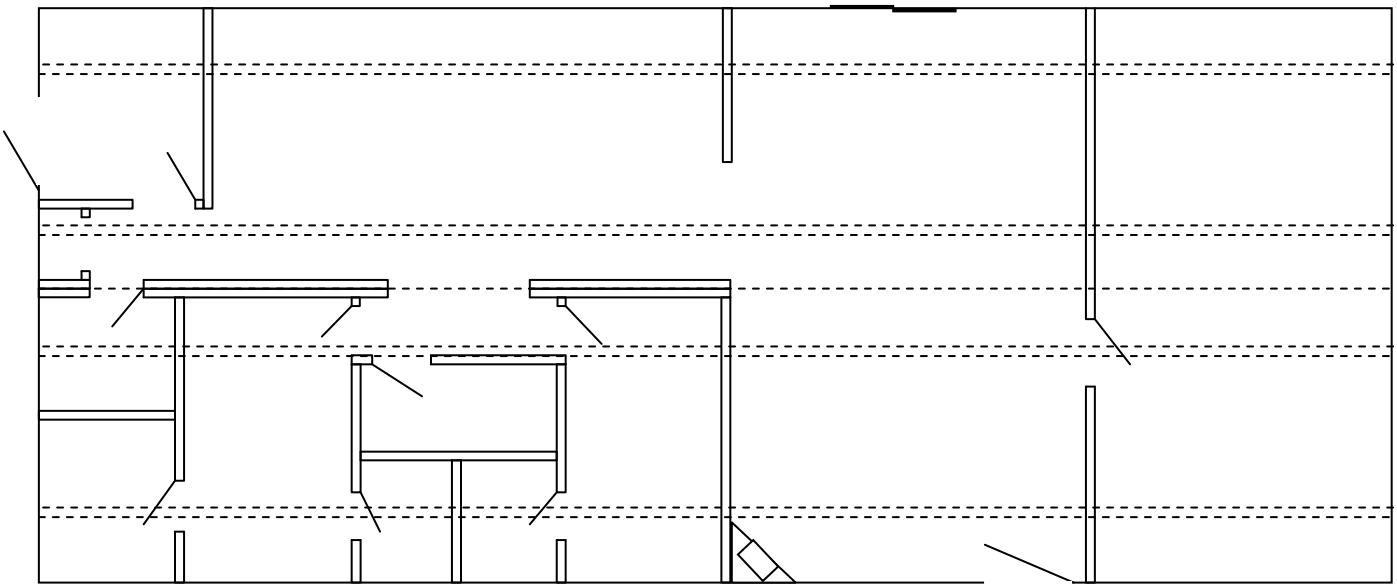

A home that measures 24 X 65 can weigh many many tons. An installer must know and understand how to transfer the home's weight to the ground. Failure to do so will cause the centerline roof to sag, cracks in the ceiling, floors to crown, doors and windows to bind and be hard to open.

There are three main support areas on the home; the frame (I-beams), the centerline and the outside edges of each section of home whether a single wide or a multi-section home.

The frame's pier spacing may be chosen by the installer on new and used homes. The perimeter piers (if needed) are specified in the manufacturer's installation manual for new homes and Rule 15C-1 for used homes. Centerline piers are also specified in the manufacturer's installation manual for new homes and Rule 15C-1 for used homes..

Where are heavier loads being imposed on centerline columns in the above diagram?
Where are heavier loads being imposed on outside perimeter in the above diagram?

Example of a crowned floor on an exterior wall. Manufacturer's installation manuals must be followed to ensure floors are properly supported

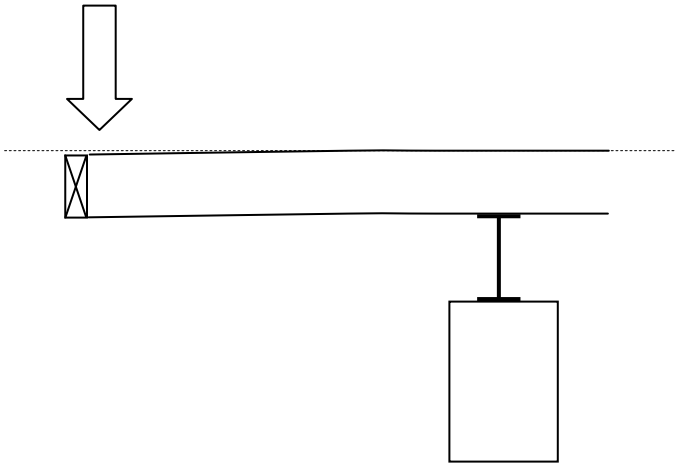

Leveling the home

USE A WATER LEVEL

A water level is a standard device for leveling the home. The level consists of the following components:
• One container (five gallon bucket or one gallon jug).
• 150 feet of 1/2 inch diameter clear plastic tubing.
• Fittings for container to tubing.
• Valve for terminal end of tubing.
• Colored water.

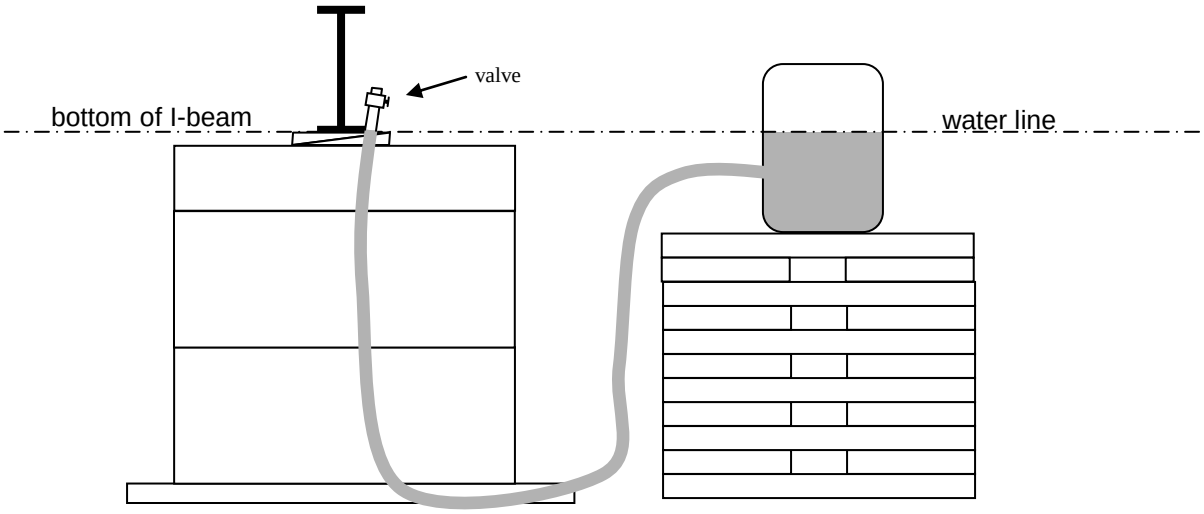

Note: To operate the water level properly, both ends of the system must be open to the atmosphere.

How to use a water level

a. **Position water level.** Position the water level such that the tubing can reach all piers.
b. **Place container.** Place the container so that the colored water in the container is close to the same level as the bottom of the I-beams.
c. **Establish height.** Locate the tubing adjacent to a pier that is set to the desired final height. Position the valve above the pier and open the valve. Move the water container up or down to where the water level is at the desired final height of the pier. Maintain the water container in that position and close the valve.
d. **Level piers.** Move the tubing to the next pier. Hold the valve above the pier and open it. Set the pier height to the level of the water in the tubing and close the valve. Repeat this step until all piers are at the same level.

Pier Spacing

Used Homes – Rule 15C

I-beam Spacing

In Rule 15C-1.0103(2) this Pier Spacing Table is given. This chart is followed on ***used homes*** when the manufactured/mobile home installation manual is not available.

Soil Load Bearing Capacity \ Footer Size	16" x 16"	18 1/2" x 18 1/2"	20" x 20"	26" x 26"
1000 psf	**3'**	**4'**	**5'**	**8'**
1500 psf	**4' 6"**	**6'**	**7'**	
2000 psf	**6'**			
2500 psf	**7' 6"**			
3000 psf				
3500 psf				
Shaded areas are at the maximum eight feet spacing				

In order to figure the I-beam spacing for used homes, take a pocket penetrometer test to find the soil bearing in pounds per square foot (psf) or simply declare 1000 psf.

Next, compare the psf reading to the Pier Spacing Table above. You will be able to determine the pier spacing and the pad size you need. You may also interpolate for other pad sizes or use chart listed on page 41.

On used homes under no circumstances can pier spacing exceed 8 foot on center spacings.

Other pad sizes and their use on different soil bearings is located on page 41.

Pier Spacing

Pier Spacing Centerline or Mating Wall

Used Homes- Rule 15C-1

Center line piers shall be located at each end of center line and eight feet (8') on center, except where openings of four feet (4') or greater occur, piers shall be located on each end of the opening within six inches (6") of jamb studs or ridge beam posts. Any openings fifteen feet (15') or larger in the exterior sidewall and/or marriage wall shall require blocking at each end of the opening with three (3) 4" x 16" x 16" stacked precast concrete pads or equivalent. Piers shall not be required under the clear (open) spans between ridge beam posts. Ref: 15C-1.0103 (1) (c)

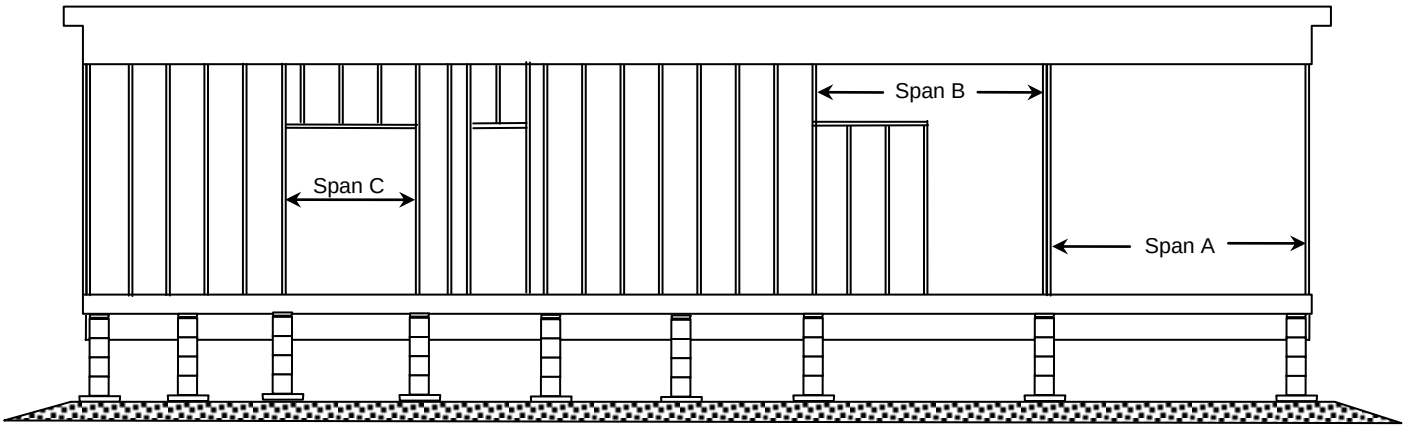

If span A is greater than 15 feet the foundation pads would be equal to three (3) 4" x 16" x 16" concrete pads. The equivalent size in plastic would be one 24" x 24" pad.

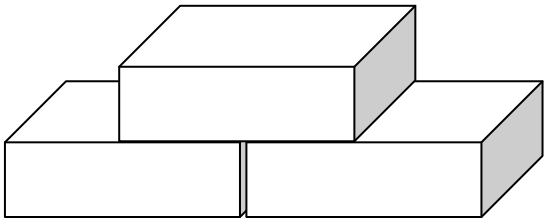

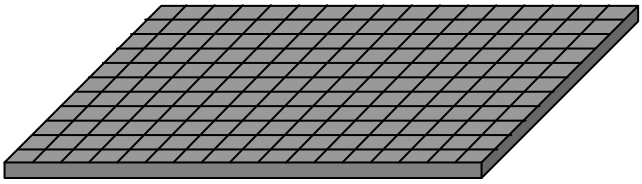

3 – 4" x 16" x 16" **or** 1 – 24" x 24"

512 sq. in. 576 sq. in.

Pier Spacing

Pier Spacing Centerline or Mating Wall

Used Homes- Rule 15C-1

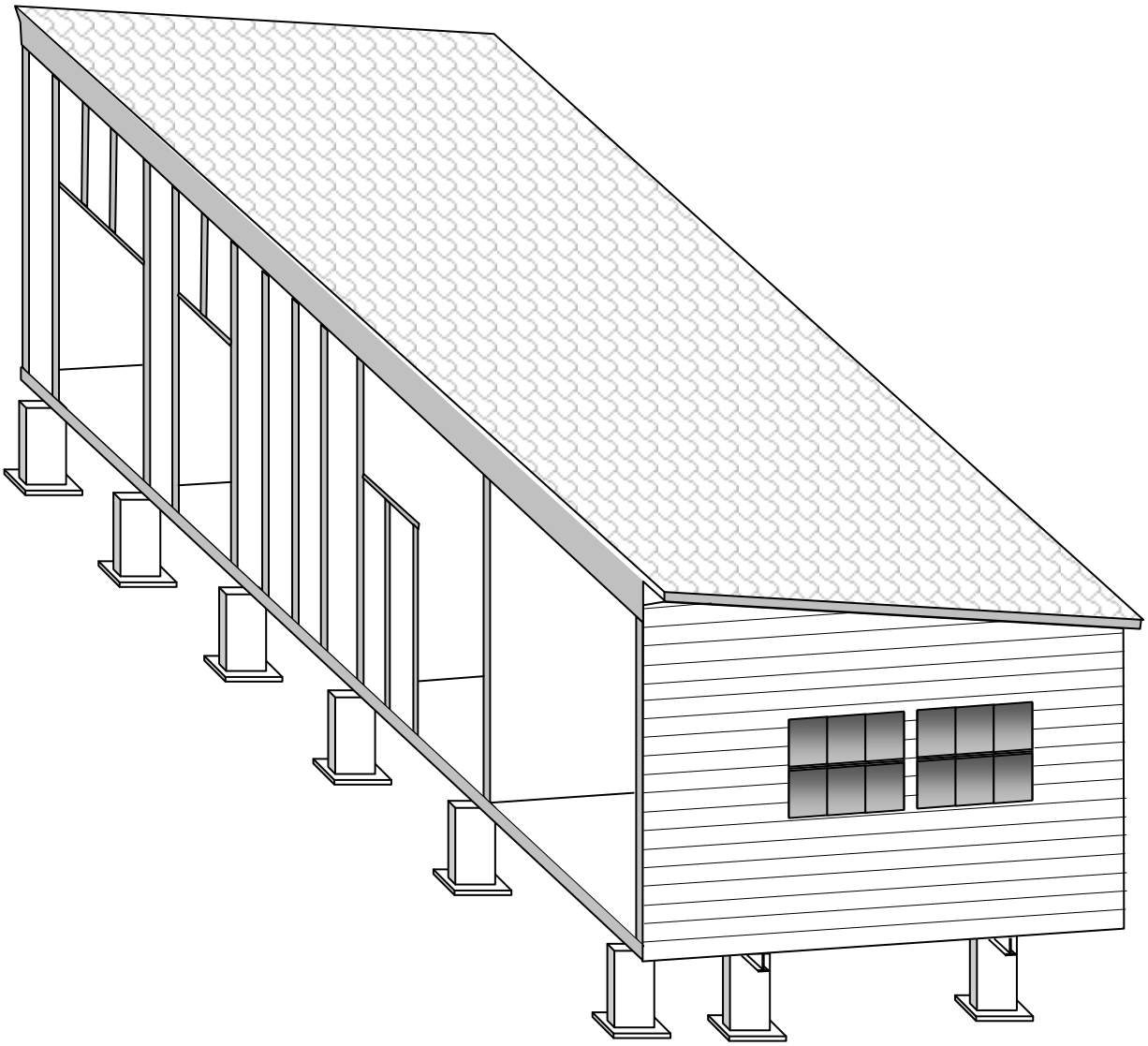

Diagram shows the requirements for Rule 15C-1 for center line blocking. Piers within 2 feet of the ends of the home are required and where centerline openings are greater than 4 feet and every 8 feet on center

Pier Spacing

Perimeter and Side Wall Pier Spacing

Used Homes- Rule 15C-1

Piers shall also be installed on each side of any perimeter door or fireplace. Bay windows or any opening forty-eight inches (48") or more shall require blocking at each end. Fourteen feet (14') or wider units with I-beam spread of less than eighty-two inches (82") and twelve feet (12') wide units with and I-beam spread of less than seventy-five and one-half inches (75 ½") shall have perimeter blocking installed at a minimum of eight foot (8') on center.

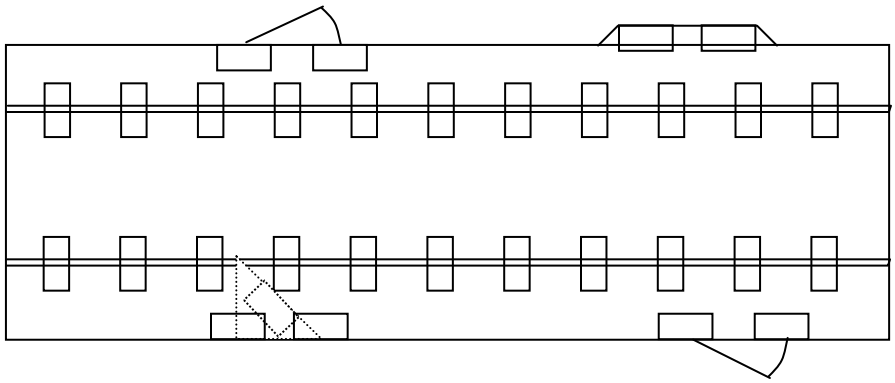

14 ft wide **12 ft wide**

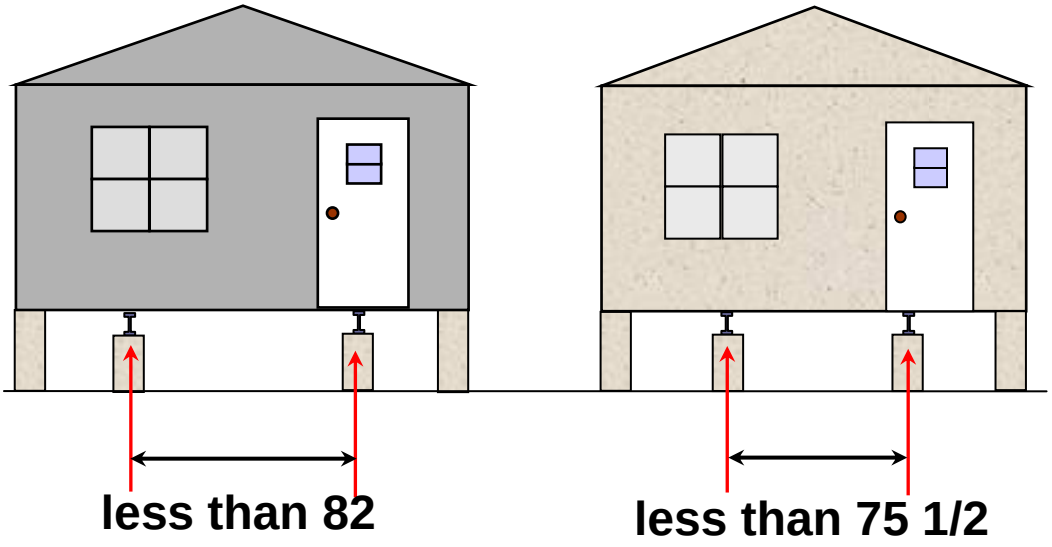

Pier Spacing

Perimeter or sidewall piers

New Homes

On new homes the manufacturer's installation instruction must be followed. Perimeter pier maximum height is 54 inches and may be single stacked. Perimeter piers must be installed with the long dimension parallel to the perimeter rail. Perimeter piers are required at side wall exterior doors and wall openings of 48 inches or greater in width and under load bearing porch posts factory installed fireplaces and fireplace stoves.

Shearwall and other specialized piers

On new homes the manufacturer's installation manual must be followed. The manual will indicate where shear wall and any other specialized piers must be located. Labels are sometimes put on the home indicating where shearwall piers are to be placed. Manufacturers may request other specialized areas such as heavy furniture locations, water beds and aquariums. On used homes you will not know where shearwall piers are to be located unless the manufacturer's decals are still pasted to the home.

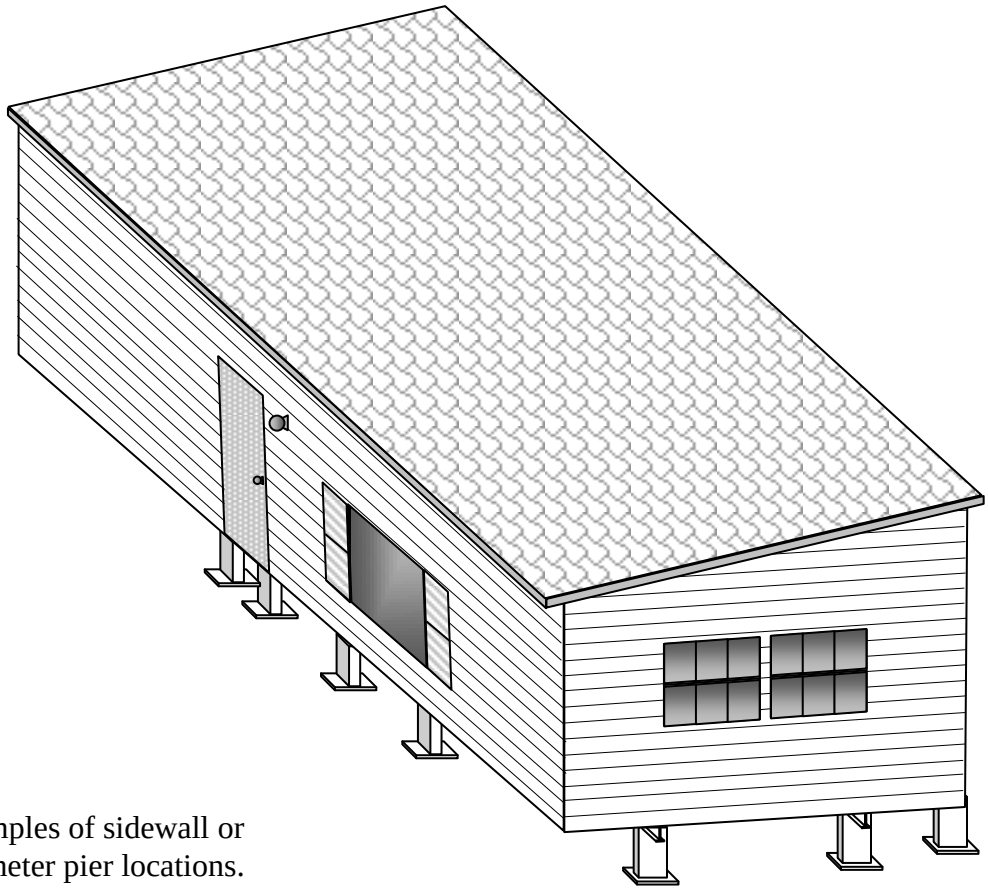

Examples of sidewall or perimeter pier locations.

Pier Spacing

Pier Spacing Centerline or Mating Wall

New Homes- Rule 15C-1

A typical centerline pier supporting columns on the mate-line.

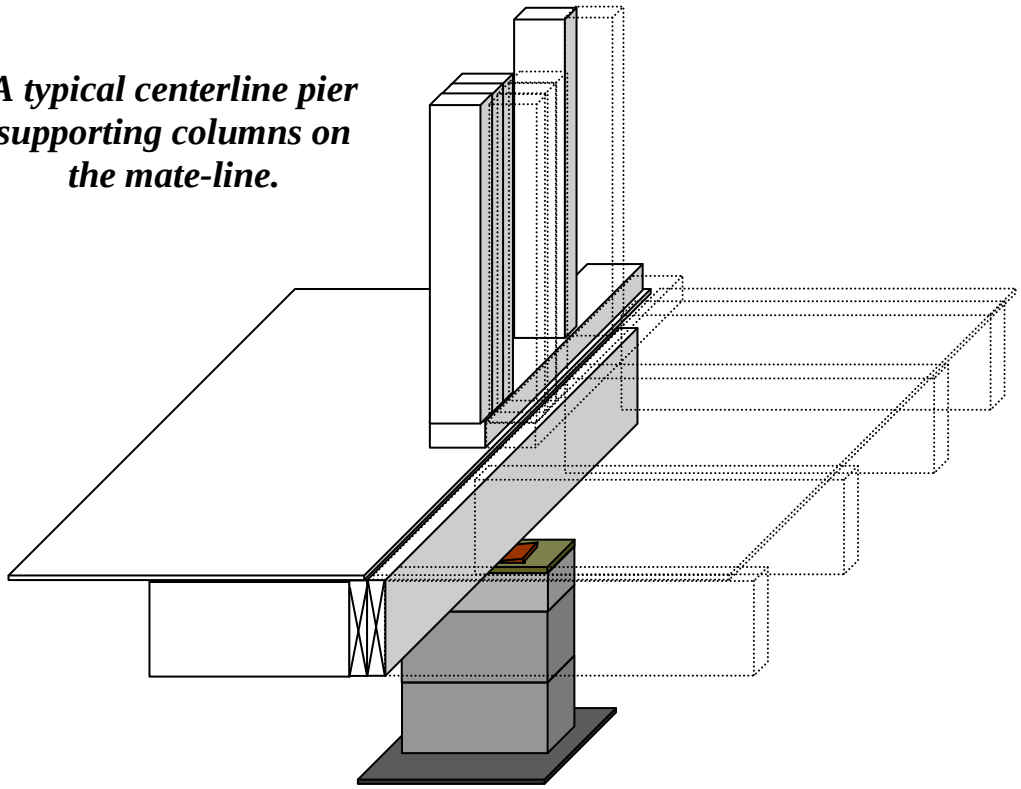

When centerline loads exceed 8000 lbs, either add an additional pier or double stack the pier.

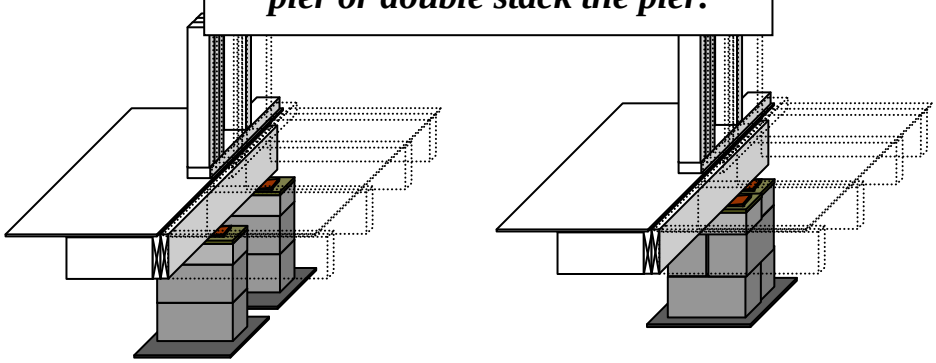

Example:
A centerline column load is 8300 pounds on soil bearing 1000 pounds per square foot. Since no approved plastic pad either individually or stacked will carry the weight, the pier will have to be split into two piers. The pier load on each pier would now be 4150 pounds. Each of these piers would now have a minimum of a 26" x 26" pad. See page 41.

Pier Spacing

New Homes

Perimeter or sidewall piers

Carefully check the manufacturer's installation manual for additional pier locations.
Examples from manufacturer's installation manuals.

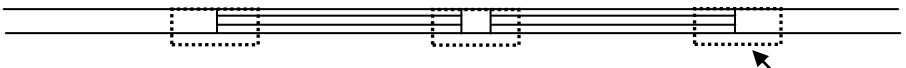

Sidewall where 2 or more 46 ½" windows are installed.
Piers are required at each end and between each opening.

Concrete block piers

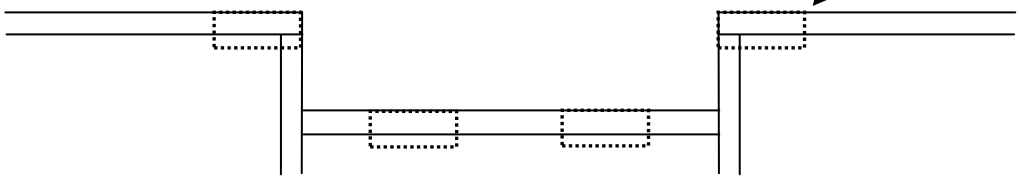

Recessed area in sidewall.
Requires piers spaced 64" O.C. max.

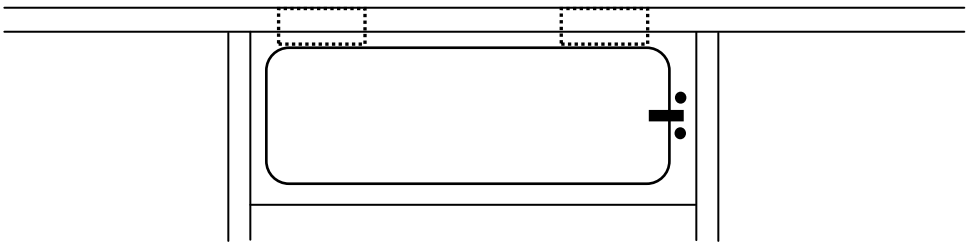

54" or 60" tub at sidewall or marriage wall.

NOTE:

Always watch for the notes in manufacturer's installation manuals. Example:

1. Perimeter blocking is required under tile floors (marriage & sidewalls) 64" o.c.
2. Kitchen cabinets along sidewall or marriage walls require perimeter or marriage wall piers at 64" o.c.

Pier Spacing

New Homes

HUD Requirements

HUD established three tables to guide manufacturers in pier spacing under new mobile homes. These tables are the maximum spacings allowed for pier spacing. Manufacturers may require spacings less than the tables, but not further apart.

In the manufacturer's installation manuals you will see pier foundation requirements base on three different criteria; square inches, pad size and weights.

Table 1

Table 1 is used by manufacturers who have designed their home's weight to be transferred to the ground by the frame of the home. If the home is a multi-sectioned home Table 3 will also be used to figure column support foundation sizes.

I-beam Spacing – frame blocking only

Table 1			
FRAME BLOCKING ONLY perimeter supports not needed except at openings or other required locations			
Pier spacing	Roof live load (psf) (**Florida only**)	Location	Load (lbs)
3' 0"	20	Frame	2,250
4' 0"	20	Frame	2,900
5' 0"	20	Frame	3,550
6' 0"	20	Frame	4,200
7' 0"	20	Frame	4,850
8' 0"	20	Frame	5,500
9' 0"	20	Frame	6,150
10' 0"	20	Frame	6,800

Simply pick out a pier spacing and note the load in the far right column. Take that load and compare weights given with plastic pad manufacturer's installation instructions. You might refer to the weights given in the chart on page 41.

Pier location	Height	Configuration	Maximum load
Frame	Less than 36 in. (except corner piers more than 3 blocks high)	Single-stack blocks with long side perpendicular to I-beam	8,000 lbs
	Between 36 & 67 inches and corner piers over 3 blocks high	Double, interlocked blocks	16,000 lbs
	Over 67 inches	Double, interlocked blocks	16,000 lbs

Pier Spacing

New Homes

I-beam Spacing – frame blocking only

Table 1 is used to determine pier spacing under I-beams for new homes.

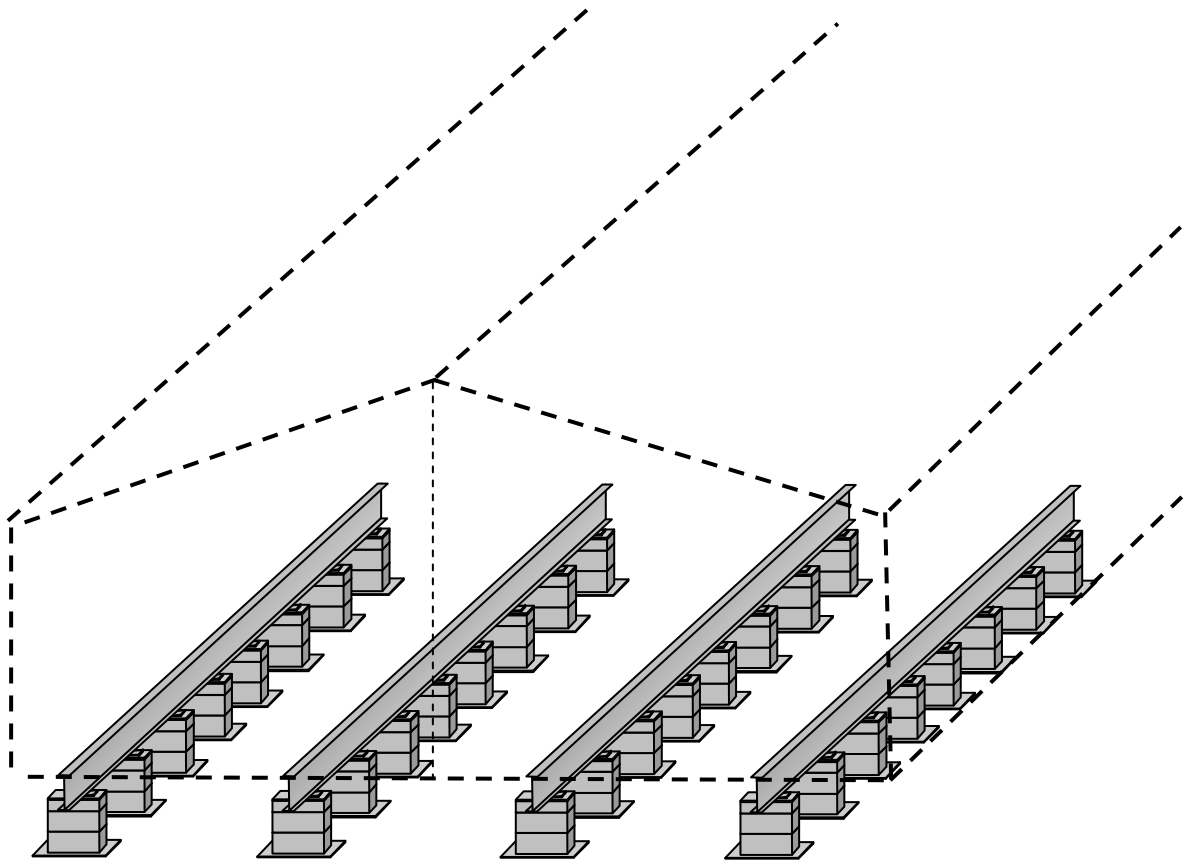

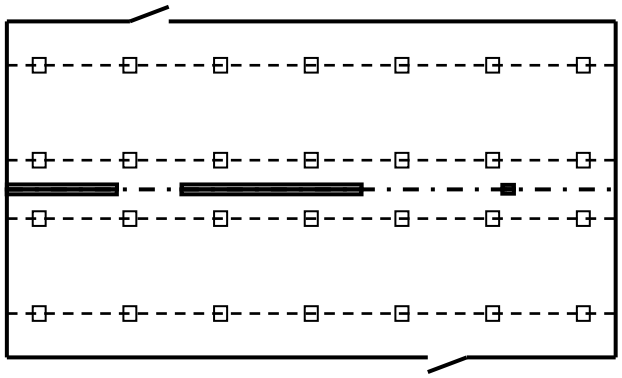

Pier Spacing - New Homes

Table 2

Table 2 is used by manufacturers who have designed their home's weight to be transferred to the ground not only by the frame of the home, but by the perimeter walls also and if the home is a multi-sectioned home the centerline walls, too. If the home is a multi-sectioned home Table 3 will also be used to figure column support foundation sizes.

I-beam Spacing – with Perimeter Blocking and Mate Line wall blocking

Table 2			
FRAME *PLUS* PERIMETER & MATE LINE BLOCKING perimeter blocking required			
Maximum pier spacing	Roof live load (psf) (Florida only)	Location	Load (lbs)
4' 0"	20	Frame	1,400
		Perimeter	1,900
		Mating	3,200
5' 0"	20	Frame	1,650
		Perimeter	2,300
		Mating	3,950
6' 0"	20	Frame	1,900
		Perimeter	2,700
		Mating	4,700
7' 0"	20	Frame	2,150
		Perimeter	3,100
		Mating	5,450
8' 0"	20	Frame	2,400
		Perimeter	3,500
		Mating	6,100
9' 0"	20	Frame	2,650
		Perimeter	3,900
		Mating	6,850
10' 0"	20	Frame	2,900
		Perimeter	4,300
		Mating	7,600

Simply pick out a pier spacing and note the load in the far right column for the frame, perimeter, and mate line. Take that load and compare weights given with plastic pad manufacturer's installation instructions. You might refer to the weights given in the chart on page 41.

Pier Configuration

Pier location	Height	Configuration	Maximum load
Perimeter	54 inches or less	Single-stacked blocks with long side parallel to perimeter rail (rim joist)	8,000 lbs

Pier Spacing

New Homes

I-beam Spacing – with Perimeter Blocking and Mate Line Blocking

Table 2 is used to determine pier spacing under I-beams, the perimeter of the home and under the mate lines for new homes with perimeter blocking.

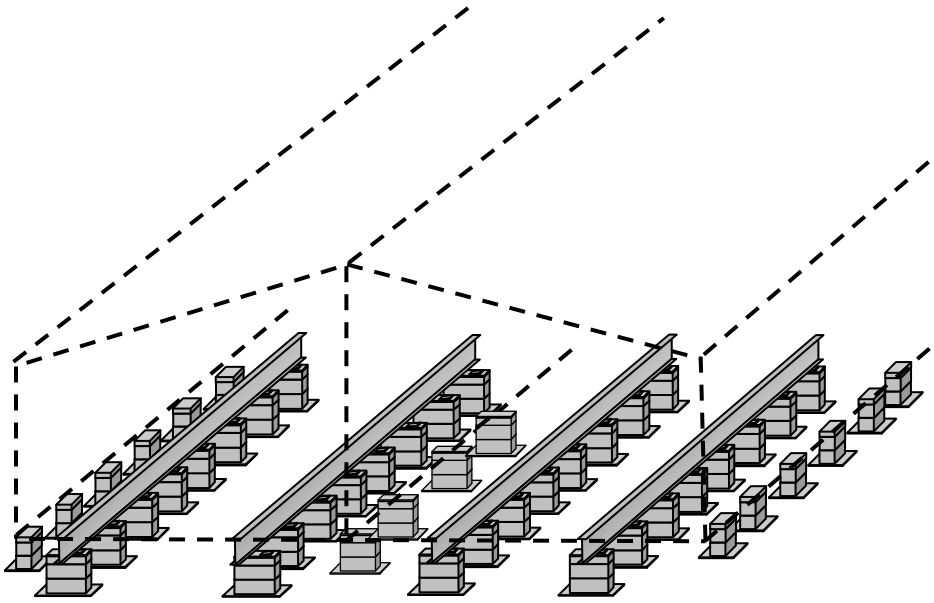

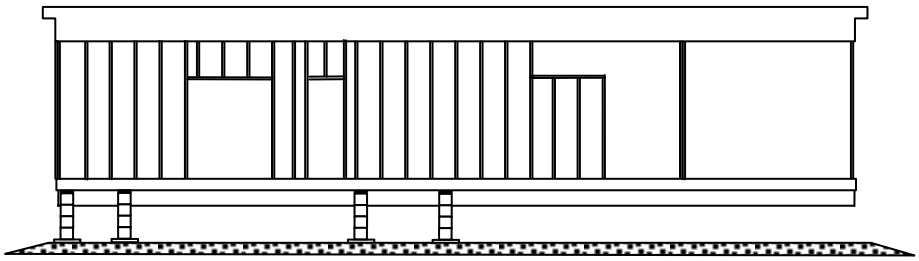

For clarity the above sketch show centerline piers under the centerline walls only.

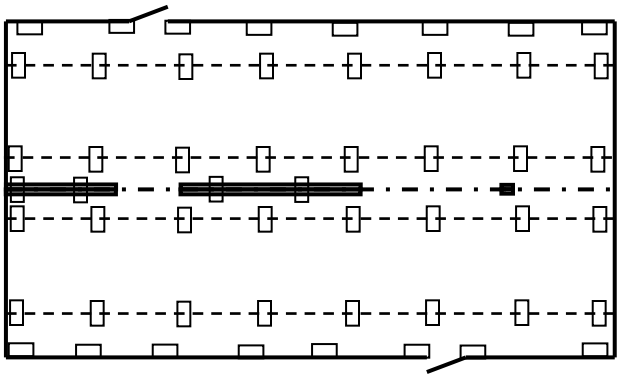

Pier Spacing

New Homes

Table 3

Table 3 is used to figure the loads on multi-sectioned homes. When large openings occur on the centerline of homes heavy loads are imposed on the columns that support the open spans.

TABLE 3 is used for determining centerline opening pier footing loads

Table 3				
Centerline or mate line openings - footing loads				
Mating wall opening (ft)	*Pier & footing load (lbs.)*		Mating wall opening (ft)	*Pier & footing load (lbs.)*
4	980		20	4,700
5	1,200		21	4,920
6	1,420		22	5,140
7	1,640		23	5,360
8	1,860		24	5,580
9	2,080		25	5,800
10	2,300		26	6,040
11	2,540		27	6,280
12	2,780		28	6,520
13	3,020		29	6,760
14	3,260		30	7,000
15	3,500		31	7,220
16	3,740		32	7,440
17	3,980		33	7,660
18	4,220		34	7,880
19	4,460		35	8,100

Note: Loads listed are maximum column loads for each section of the manufactured home. An installer must double each of these loads when both mate line ridgebeam support columns end at the same location on both sections of the home.

Pick out a mating wall opening size and note the load in the right column. Take that load and compare weights given with plastic pad manufacturer's installation instructions. You might refer to the weights given in the chart on page 41.

Pier Configuration

Pier location	Height	Configuration	Maximum load
Marriage line	54 inches or less	Single-stack blocks with long side perpendicular to the marriage line.	8,000 lbs

Pier Spacing

New Homes

Table 3 deals with centerline openings on the centerline of the home.

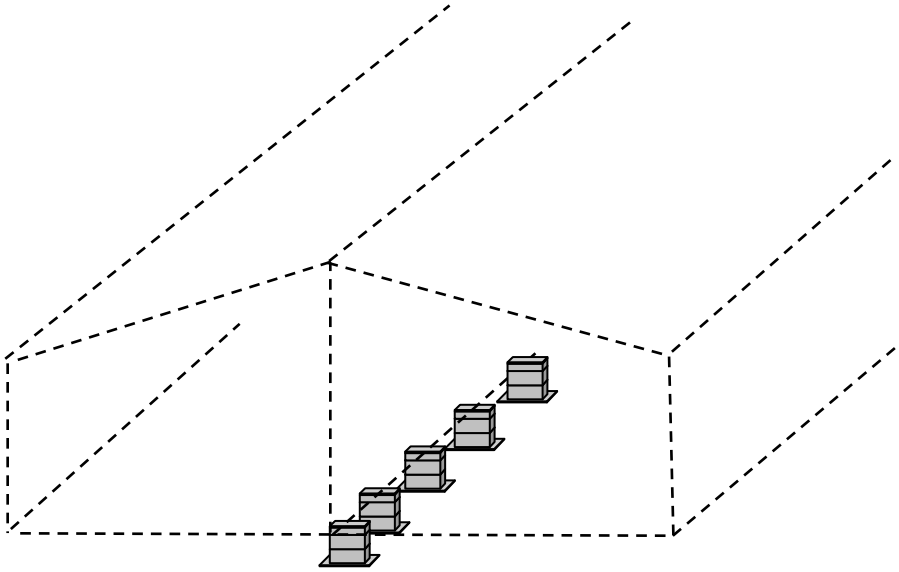

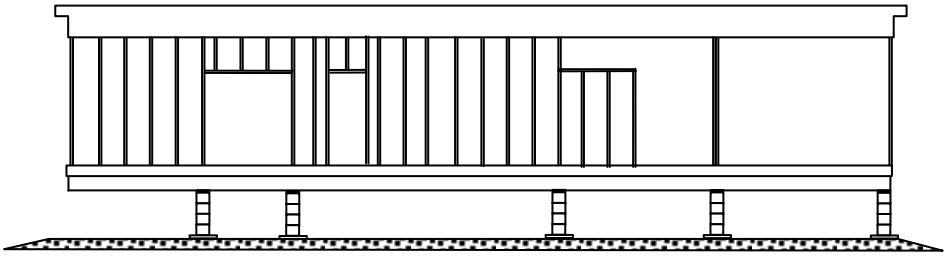

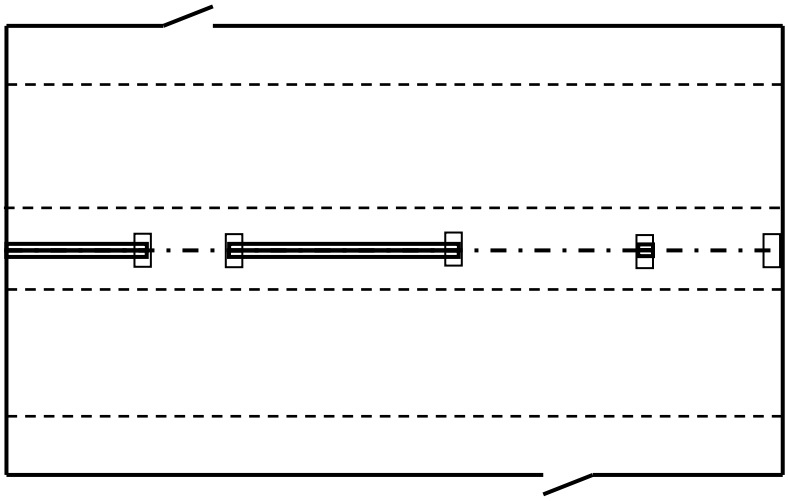

New Homes - Centerline or Mating Wall

Always follow the manufacturer's installation manual

Example of a centerline where the manufacturer requires I-beam blocking only

This example is found in HUD's Model Installation Standards

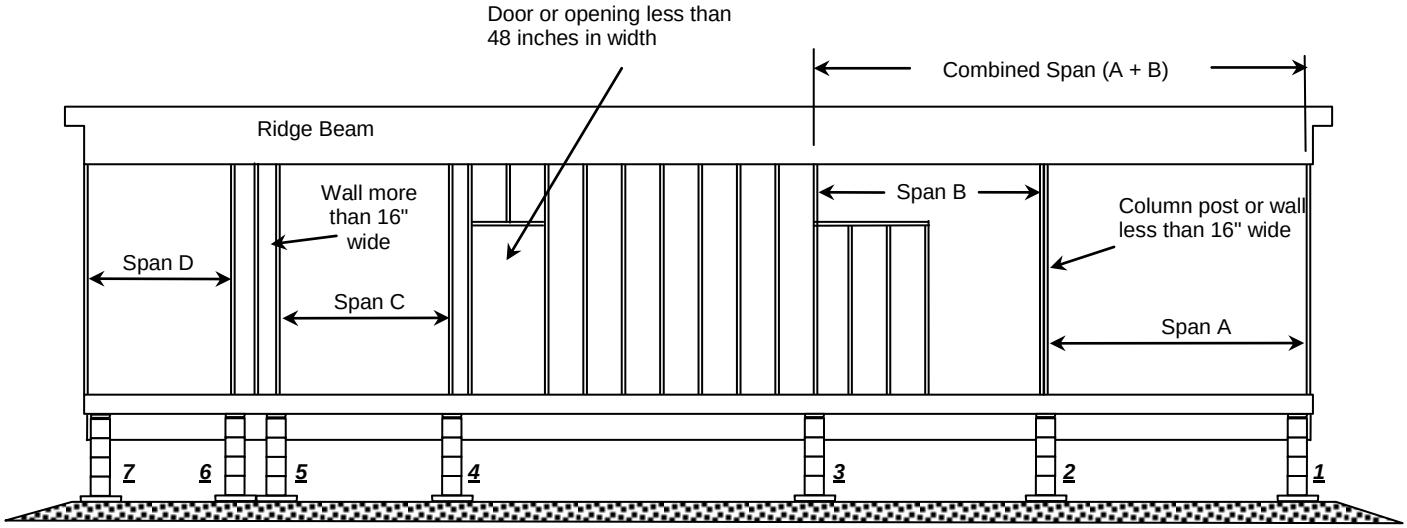

Pier 1 – Size footing for span A by using Table 3 on page 62.
Pier 2 – Size footing for combined spans A + B by using Table 3 on page 62.
Piers 3, 4, 5, 6, & 7 – Size footings for span B, C & D by using Table 3 on page 62.
NOTE: If the small wall between span C and D (piers 5 & 6) is less than 16" in width use combined span C + D to figure the load. Only one pier would be needed.

Notes:

1. Bottom of footings must extend below the frost line. *Note: there is no frost line in Florida.*
2. Piers may be offset up to 6" in either direction along the supported members to allow for plumbing, electrical, mechanical, equipment, crawlspaces, or other devices.
3. Single-stacked concrete block pier loads must not exceed 8,000 lbs.
4. Prefabricated piers must not exceed their approved or listed maximum vertical or horizontal design loads.
5. When a full-height mating wall does not support the ridge beam, this area is considered an unsupported span, as in span B.
6. Piers are not required at openings in the mating wall that are less than 48" in width. Place piers on both sides of mating wall openings that are 48" or greater in width.

New Homes - Centerline or Mating Wall

Always follow the manufacturer's installation manual

Example of a centerline where the manufacturer requires I-beam, perimeter and mate line blocking

This example is found in HUD's Model Installation Standards

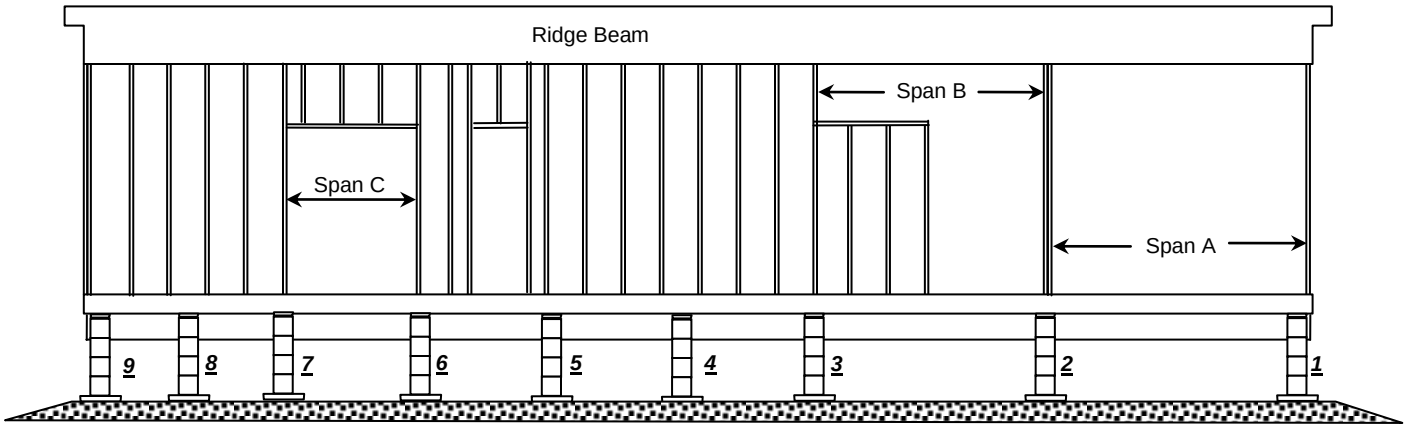

Pier 1 – Size footing for span A by using Table 3 on page 62.
Pier 2 - Size footing for combined spans A + B by using Table 3 on page 62.
Pier 3 - Size footings for span B by using Table 3 on page 62.
Piers 4, 5, 8, 9 – Size footings by using Table 2 on page 60.
Piers 6 & 7 – Size footing for span C by using Table 3 on page 62.

Notes:

1. Bottom of footings must be below the frost line. *Note: there is no frost line in Florida.*
2. Piers may be offset up to 6 inches in either direction along the supported members to allow for plumbing, electrical, mechanical equipment, crawlspaces, or other devices.
3. Single-stacked concrete block pier loads must not exceed 8,000 lbs.
4. Piers are not required at openings in the mating wall that are less than 48 inches in width. Place piers on both sides of mating wall openings that are 48 inches or greater in width.
5. When a full-height mating wall does not support the ridge beam, this area is considered an unsupported span, as in span B.
6. **In areas where the open span is greater than 10 ft, intermediate piers and footings must be placed at maximum 10 ft. on center.**
7. Prefabricated piers must not exceed their approved or listed maximum vertical or horizontal design loads.
8. Column piers are in addition to piers required under full-height mating walls.

Example A: A ***NEW*** 24 x 60 home, 1000 psf soil bearing, 20 lb. roof live load.

Frame blocking only.

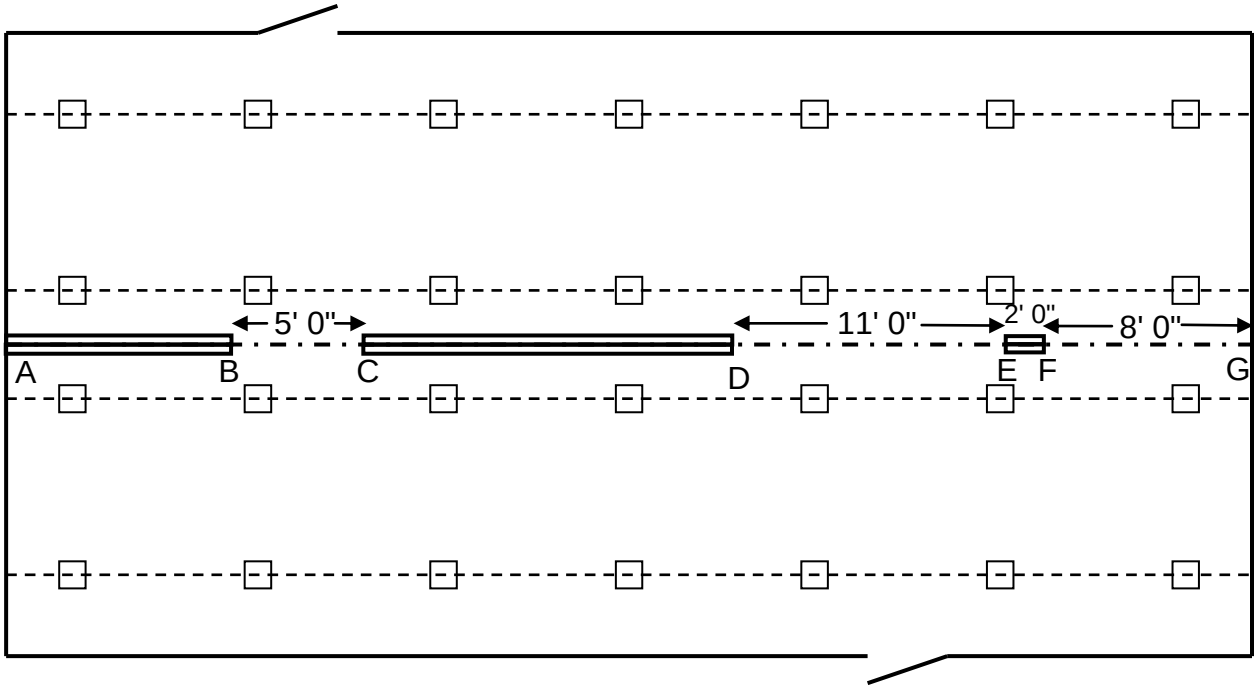

I-beam piers - The I-beam piers will be spaced at 6' 0".
What is the weight on the piers? _____
What is the minimum size plastic pad needed? _____

Centerline Piers - The centerline piers will be spaced at 6' 0" where needed.
Is a pier required under column A? _____ If so what is the minimum pad size? _____
What is the weight on the pier(s) at columns B or either C? _____
What is the minimum size plastic pad needed? _____
What is the weight on the pier(s) at column D or either E? _____
What is the minimum size plastic pad needed? _____
What is the weight on columns F or either G? _____
What is the minimum size plastic pad needed? _____
If the wall length between E & F is 1' 0", would two piers be necessary? _____
What would be the weight of the E/F pier(s)? _____
What is the minimum size plastic pad needed? _____

Perimeter Piers
Are perimeter piers required? _____ If so, where _____.

Example B: A ***NEW*** 24 x 60 home, 1000 psf soil bearing, 20 lb. roof live load.

Frame plus perimeter and mate line blocking required.

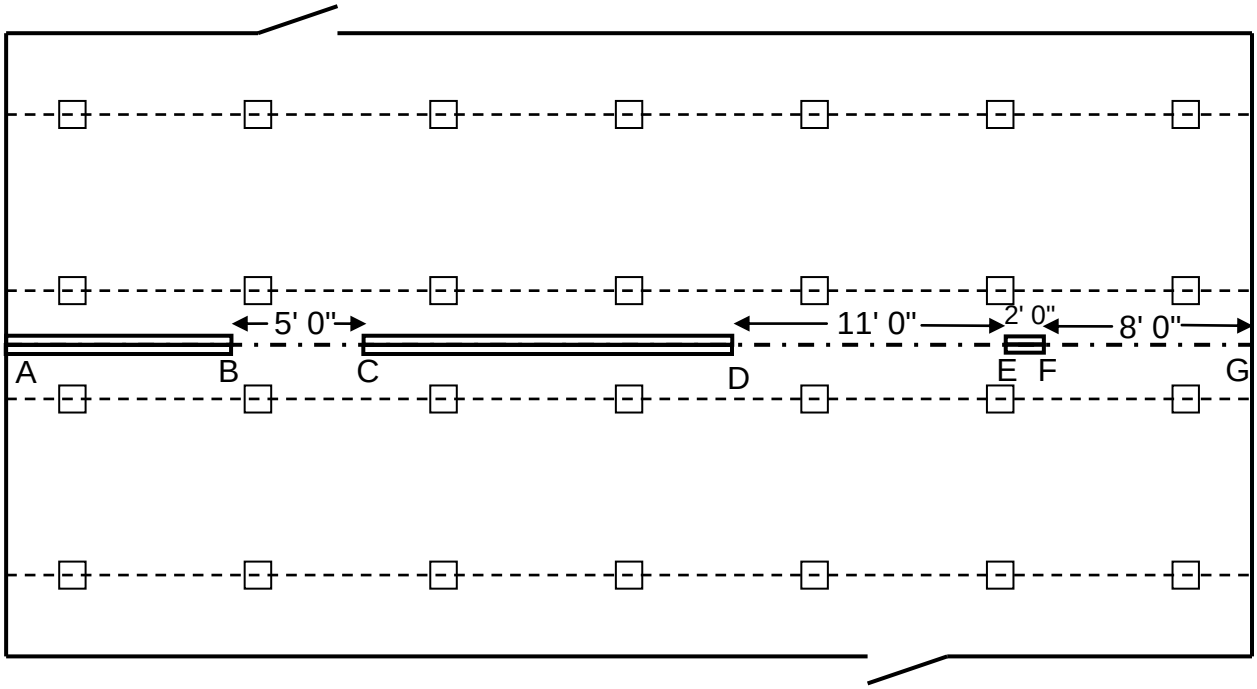

I-beam piers - The I-beam piers will be spaced at 6' 0".
What is the weight on the I-beam piers? _____
What is the minimum size plastic pad needed? _____

Centerline Piers - The centerline piers will be spaced at 6' 0" where needed.
Is a pier required under columns A? _____
The mating wall length between A & B is 11' 0". How many piers under this wall? _____
What is the weight on the piers under this wall (does not include column B)? _____
What is the weight on the pier(s) at column B or either C? _____
What is the minimum size plastic pad needed? _____
The mating wall length between C & D is 20' 0". How many piers under this wall? _____
What is the weight on each pier under this wall (does not include column C or D)? _____
What is the weight on the pier(s) at column D or either E? _____
What is the minimum size plastic pad needed? _____
Is an additional pier needed between D & E? _____
What is the weight on column F or either G? _____
What is the minimum size plastic pad needed? _____
If the wall length between E & F is 1' 0", would two piers be necessary? _____
What would be the weight of the E/F pier(s)? _____
What is the minimum size plastic pad needed? _____

Perimeter Piers - The perimeter piers will be spaced at 6' 0".
Are perimeter piers required? _____

What is the weight on these piers? _____ Minimum pad size? _____

Example C: A ***USED*** 24 x 60 home, 1000 psf soil bearing, 20 lb. roof live load. I-beam spread is 74"

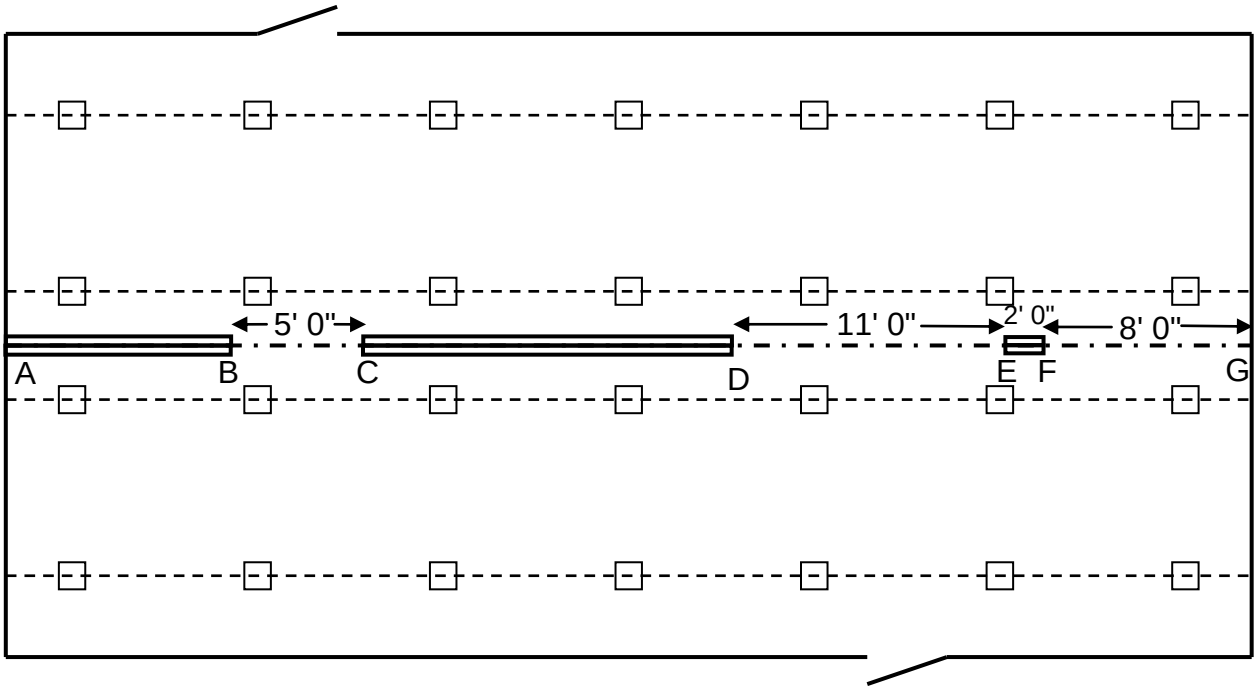

I-beam piers - The I-beam piers are spaced at 5' 0".
What is the minimum size plastic pad you would use? _____

Centerline Piers
Is a pier required under column A? _____ If so what is the minimum pad size? _____
The mating wall length between A & B is 11' 0". How many piers under this wall? _____
What is the minimum size plastic pad needed? _____
What are the minimum size plastic pads to be used at columns B & C? _____
The mating wall length between C & D is 20' 0". How many piers under this wall? _____
What are the minimum size plastic pads to be used at columns D & E? _____
Is an additional pier needed between D & E? _____
If the distance between D & E is 15' 6", what size pad(s) would be needed? _____
What are the minimum size plastic pads to be used at columns F & G? _____
If the wall length between E & F is 2' 0", are two piers necessary? _____

Perimeter Piers
Are perimeter piers required? _____ If so, describe where _____
_____
What is the minimum size plastic pad on the perimeter piers? _____

Blocking Plans

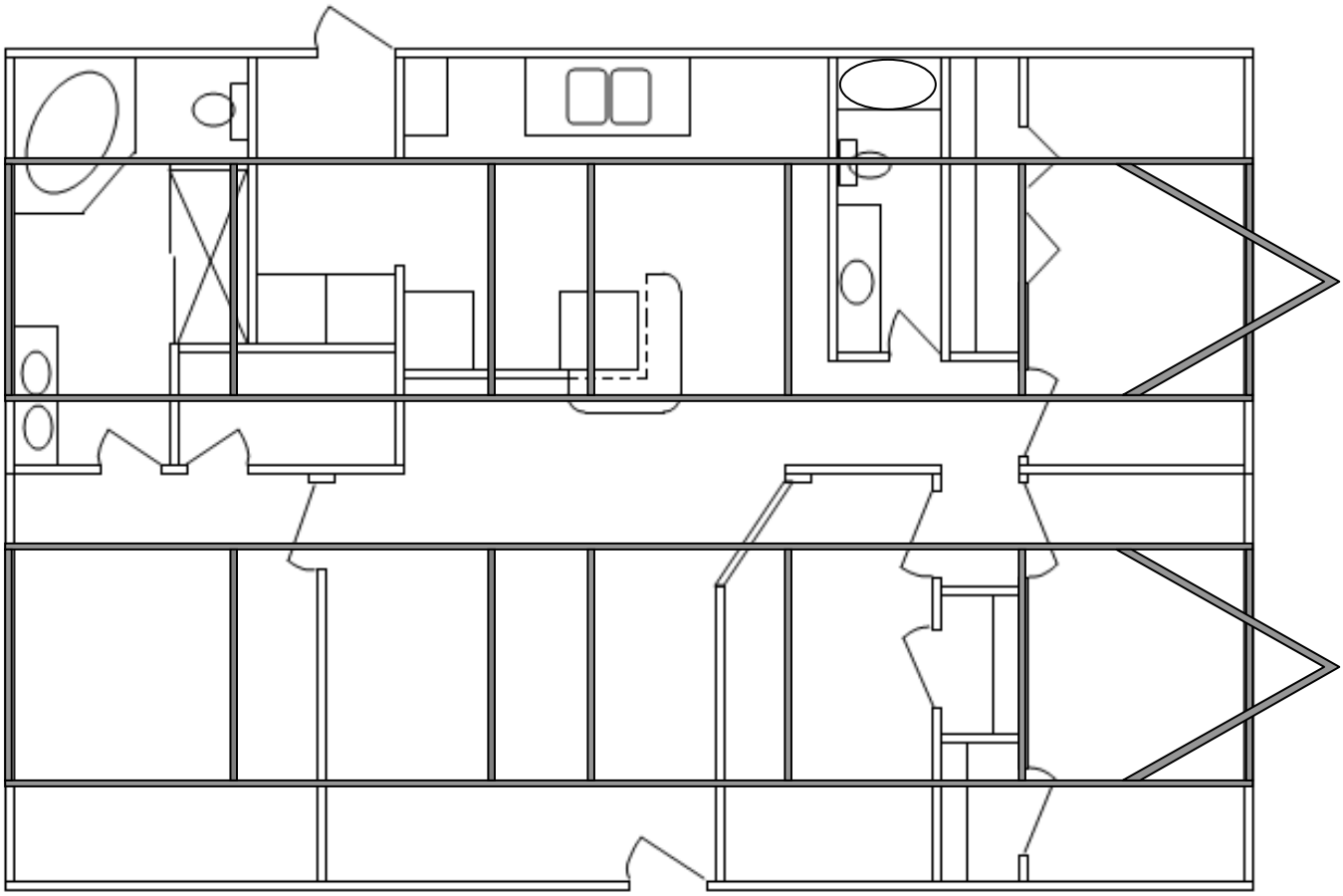

As an exercise sketch pier locations where you think they should be placed.

ANCHORS AND TIE-DOWNS

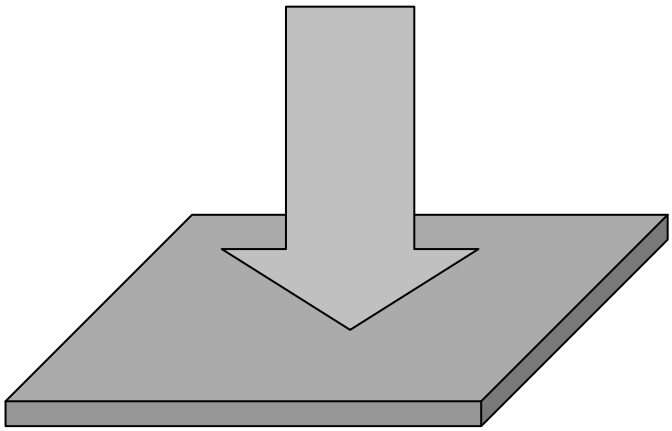

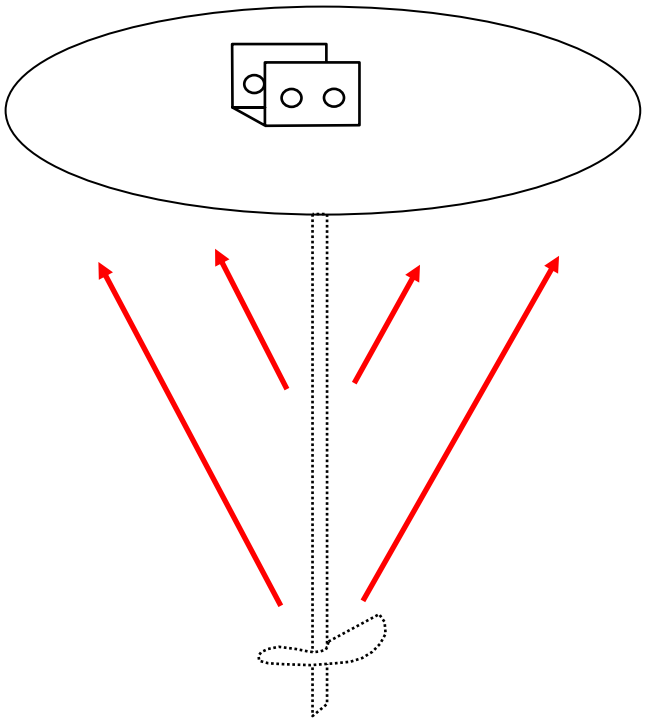

Soil and the soil bearing capacity have been covered. Now the soil's holding capacity and its effect on the anchorage of a home will be covered. Florida has some of the poorest soil in the nation and we commonly refer to it as sand.

Note: Anchoring mobile/manufactured homes in Florida is governed by Rule 15C-1 for all new and used homes. Florida has several overrides and each will be covered.

All anchors and tie down components shall be tested and listed and marked with identification.

The Torque Probe Test

The test probe is a device for measuring the torque value of soils to assist in evaluating the holding capability of the soils in which the anchor is to be placed.

The test probe has a helical screw. It's located on the end of the probe and it measures 10.75 inches in length, the major diameter is 1.25 and the minor diameter is 0.81 inches. The pitch is 1.75 inches and the shaft must be of suitable length for anchor depth.

The probe is turned into the soil to a depth of four feet and a torque reading is taken.

A torque test must be taken at every job site unless you plan to use 5 foot anchors for the entire home.

TORQUE PROBE TEST KIT

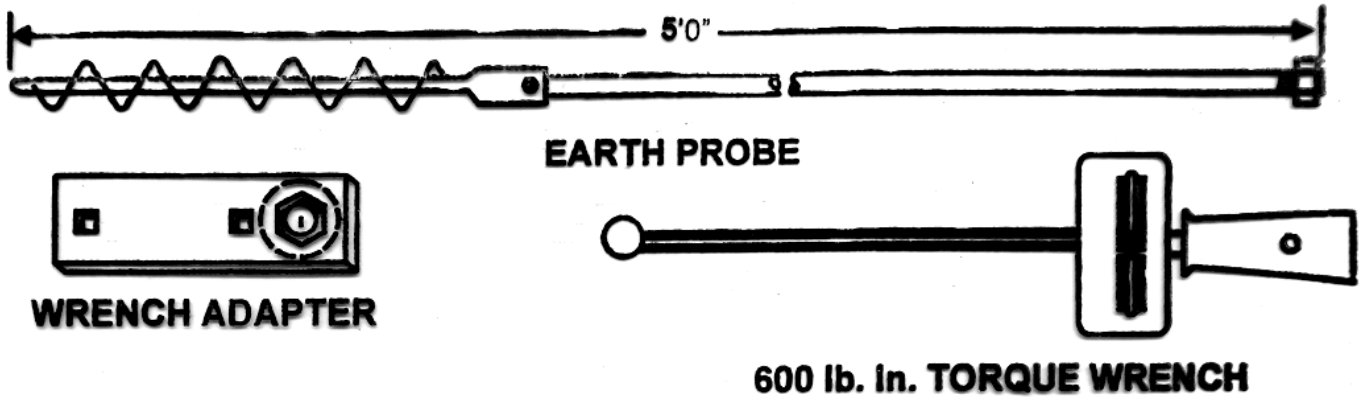

ANCHORS AND TIE-DOWNS

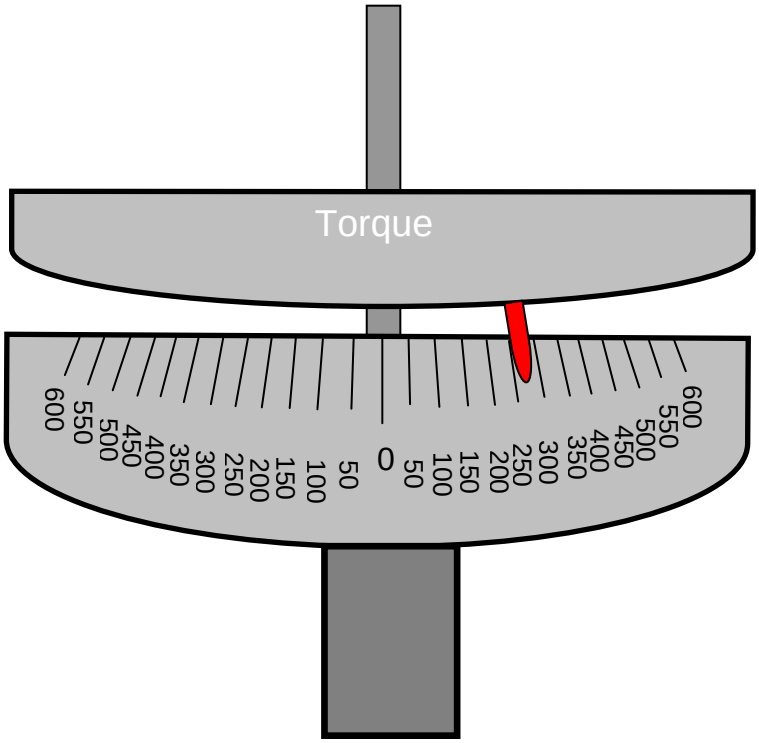

GROUND ANCHORS – FLORIDA ONLY			
Soil conditions			
Classification number	Soil description	Blow Count	Test Probe Torque Value
4A	Loose to medium dense sands; firm to stiff clays and silts; alluvial fills	18-23	276 - 350
4B	Loose sands; firm clays; alluvial fills	12-17	175 - 275

Rule 15C-1.0108 Anchor and stabilizer holding power for Type 4(a) soil shall require a minimum of four thousand seven hundred twenty-five (4,725) pounds in either direction (3,150 working load, 4,725 ultimate load). Anchor and stabilizer holding power for Type 4(b) soil shall require a minimum of six thousand (6,000) pounds in the vertical (4,000 working load and 6,000 ultimate) and four thousand seven hundred twenty-five (4,725) pounds (3,150 working load and 4,725 ultimate load) in a forty-five (45) degree horizontal direction.

ANCHORS AND TIE-DOWNS

These specifications are standards set by the Department of Highway Safety and Motor Vehicles for new and used mobile/manufactured homes or park trailers.

Anchors:
(a) Type I anchor holding power for mobile/manufactured homes shall be tested to a working load of three thousand one hundred and fifty (3,150) pounds, with an ultimate load of four thousand seven hundred twenty-five (4,725) pounds.
(b) Type II anchor holding power for mobile/manufactured homes shall be tested to a working load of four thousand (4,000) pounds, with an ultimate load of six thousand (6,000) pounds.

HUD does not require five foot anchors. ► ***Florida override*** ◄

4 foot anchor
Type 1

5 foot anchor
Type 2

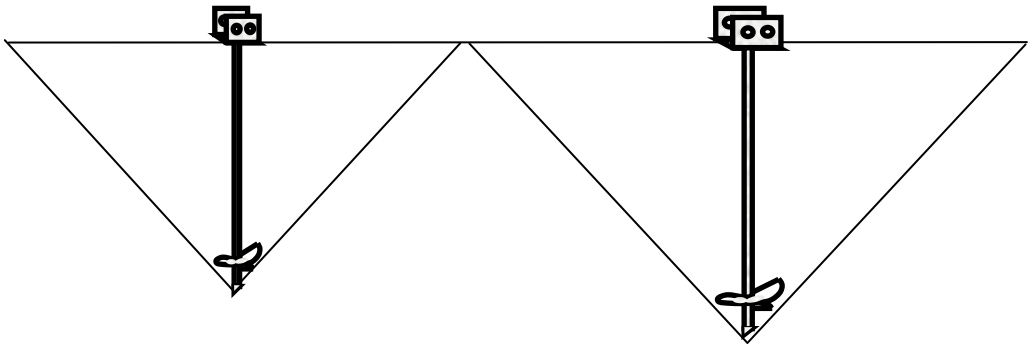

3150 working load
4725 ultimate load

4000 working load
6000 ultimate load

ANCHORS AND TIE-DOWNS

Anchor Installation

Anchors are to be installed to the anchor manufacturer's installation manual.

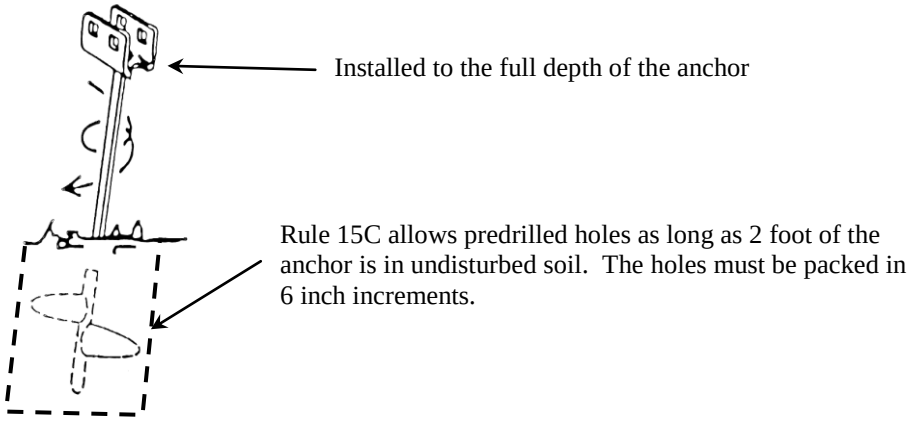

Anchor Identification

Anchors are always identified by the head of the anchor. The model number is required to be stamped into the head of the anchor.

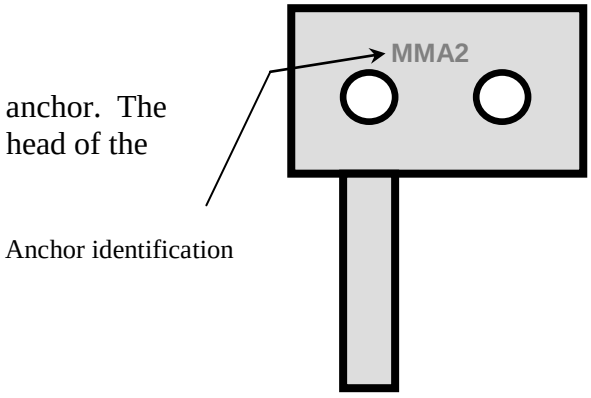

Anchor Orientation

All anchors are required to be installed in a vertical position. Follow manufacturer's installation instruction for a slight angle allowed at the sidewalls so the anchor's head will be under the home and out of the way of any skirting installed.

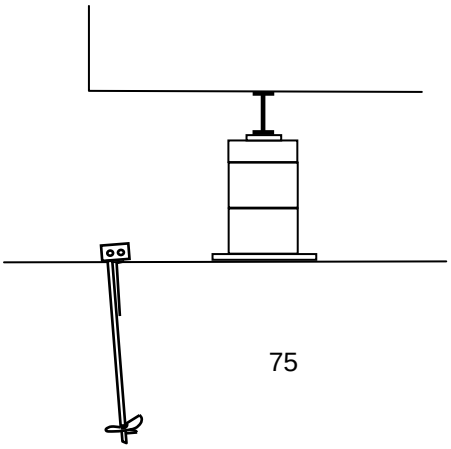

ANCHORS AND TIE-DOWNS

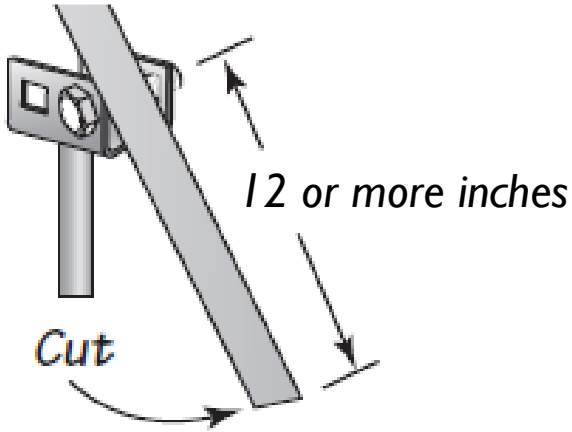

Insert slotted bolt into the square head of the anchor. Pull strap past bolt head and cut strap so that 12 or more inches of strap is left to wrap onto the slotted bolt.

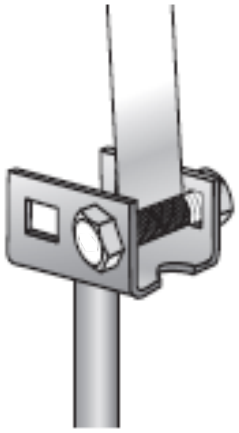

Insert the strap end into the bolt's slot until flush with the opposite side of bolt.

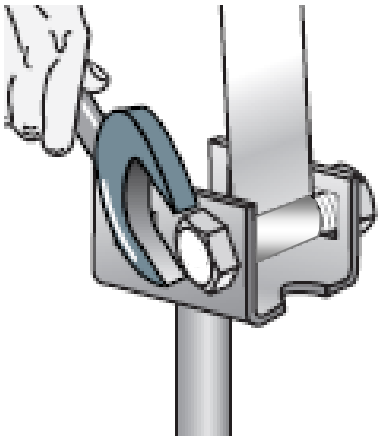

Using a wrench or socket, turn the bolt, winding the strap so that a minimum of 3 to 5 complete turns are made – see the manufacturer's installation instructions.

ANCHORS AND TIE-DOWNS

Strap Angle

Manufactured homes are required to resist wind forces that may cause the home to overturn or slide off the foundation. The manufacturer commonly specifies frame tie straps with a range of acceptable angles to resist wind.

Installers and inspection personnel should ensure that the angle of the anchoring strap is within the range specified in the manufacturer's installation instructions and it is usually between 40 to 50 degrees.

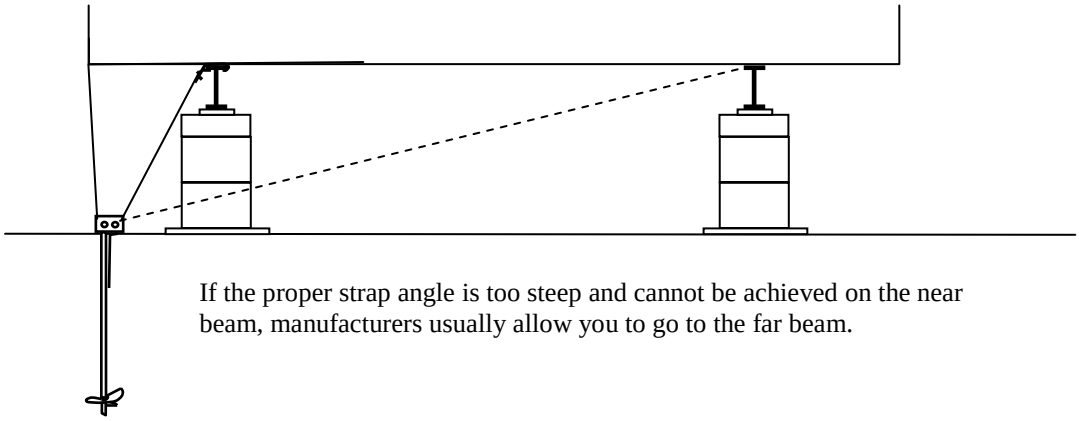

If the proper strap angle is too steep and cannot be achieved on the near beam, manufacturers usually allow you to go to the far beam.

Stabilizer plates

All diagonal or frame ties anchors shall have stabilizing devices approved by the department, each of which shall have a minimum surface area of 180 square inches and shall be coated with hot-dipped zinc galvanizing, .60 ounces per square foot or zinc coated. The stabilizing device shall be installed with the top of the stabilizing device flush with the soil to prevent the anchor from slicing through the soil. The anchor shaft will be centered with stabilizer plate and will rest against the plate. Stabilizer devices are not required at vertical tie-downs that have no diagonal/frame tie attached. ABS stabilizers have also been approved by the department for use in Florida.

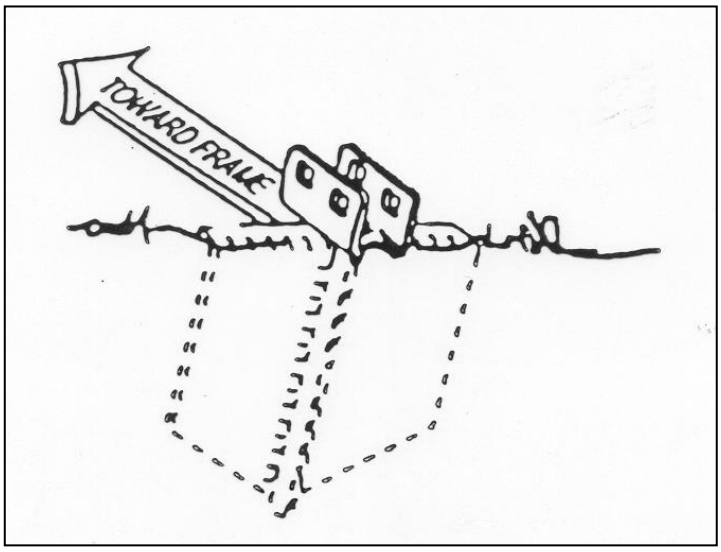

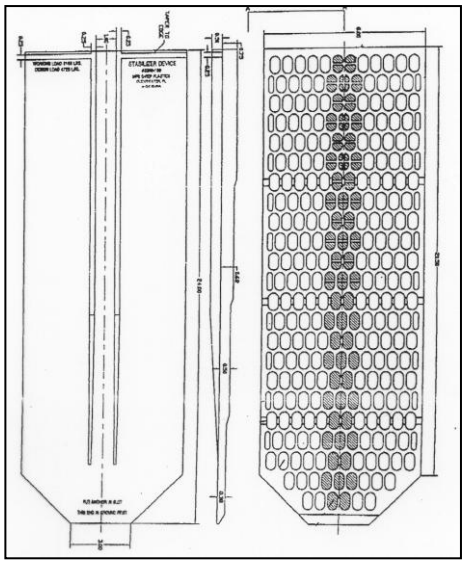

ANCHORS AND TIE-DOWNS

► ***Florida override*** ◄

Many different anchoring techniques may be found in home manufacturer's installation instructions. However, Rule 15C-1 will override them and these are some examples.

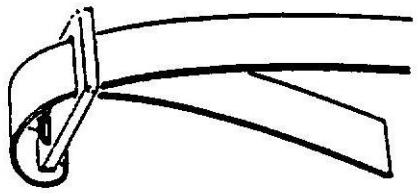

Buckles are not allowed.

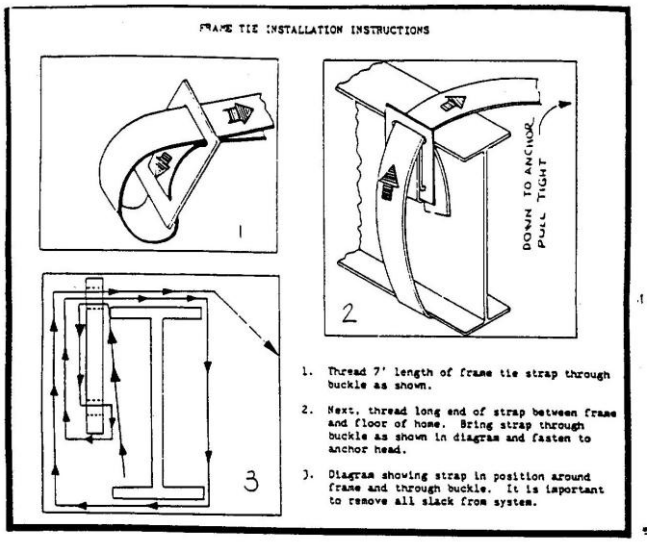

Wrapping the strap around the I-beam is not allowed.

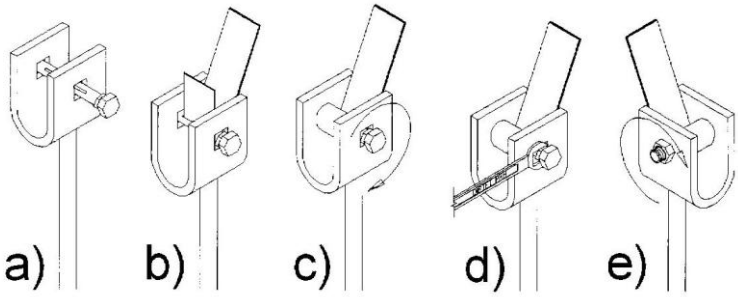

No excess strap can be wrapped around the anchor bolt. See diagram (b)

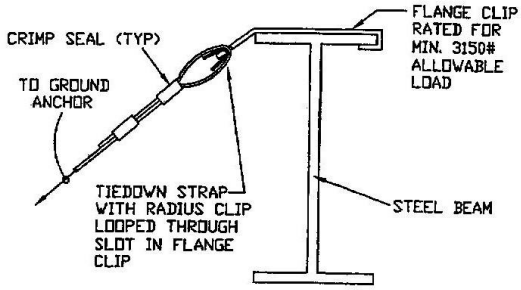

No hooks are to be used to clip onto the I-beam – only frame clamps.

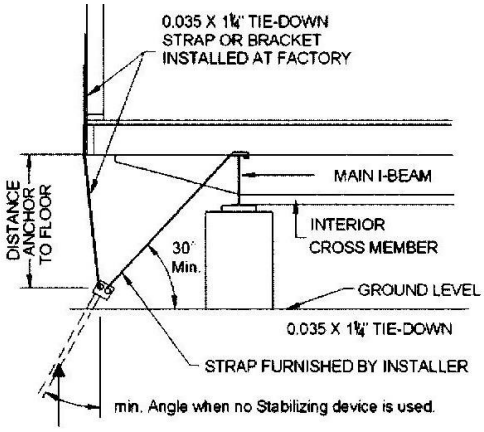

Anchors are not allowed to be installed at steep angles.

ANCHORS AND TIE-DOWNS

Twelve or more requirements of proper anchor and tie down installation are required at each vertical/diagonal anchor location.

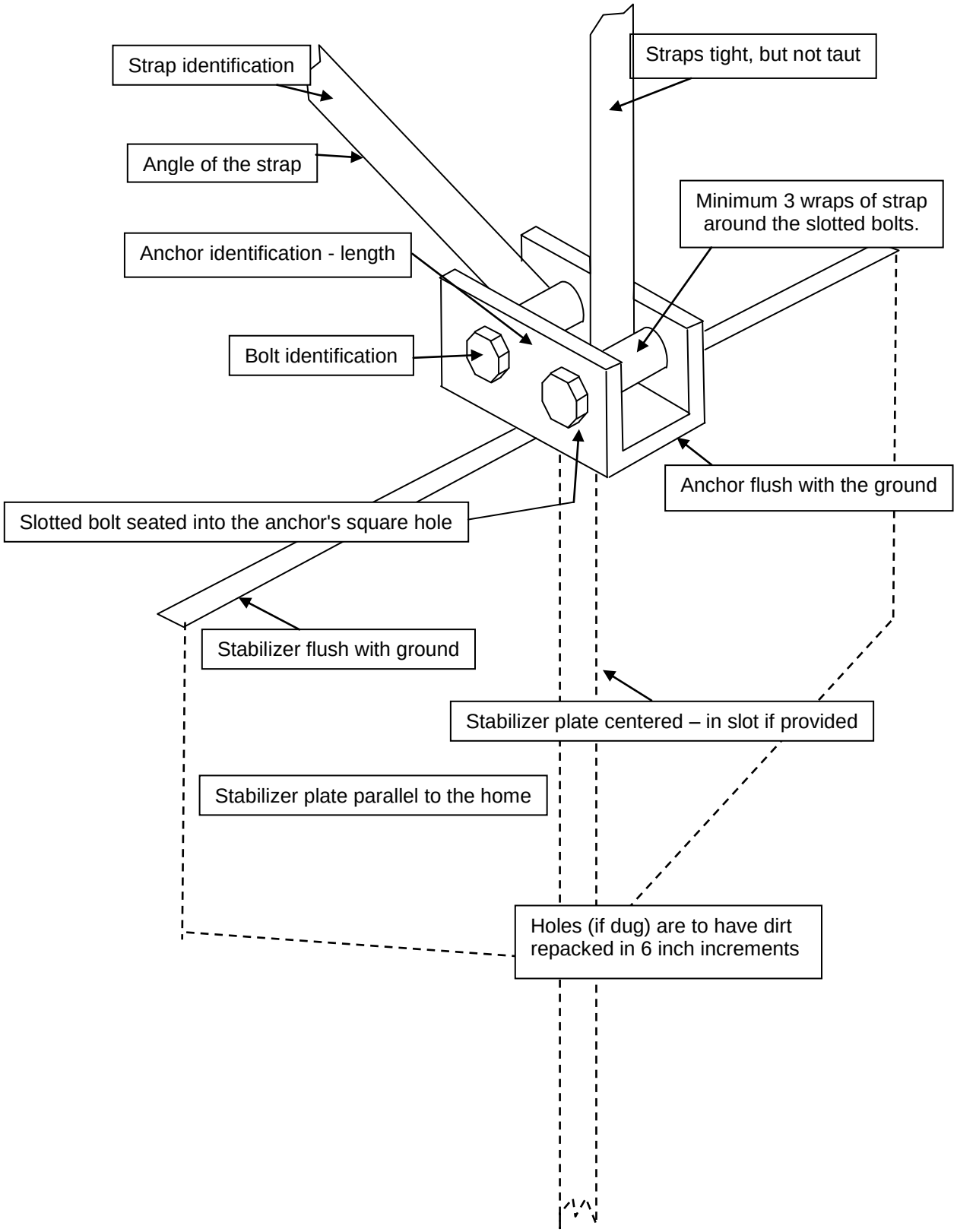

ANCHORS AND TIE-DOWNS

Tie-Down Straps

All tie-down straps, shall be Type 1, Finish B, Grade 1, Steel Strapping, .035 inch minimum thickness, hot-dipped galvanized zinc coating .60 ounces per square foot, per surface, 4750 pounds minimum break strength, marked every 12 to 15 inches with the manufacturer's name and ASTM Spec. D3953-91, and 1 ¼" wide. ► ***Florida override*** ◄ HUD will allow .30 ounces per square foot, per surface in other States.

When lengthening a strap is necessary, a 12 inch strap overlay is required with 2 seals evenly spaced. Each seal shall have 2 crimps evenly spaced.

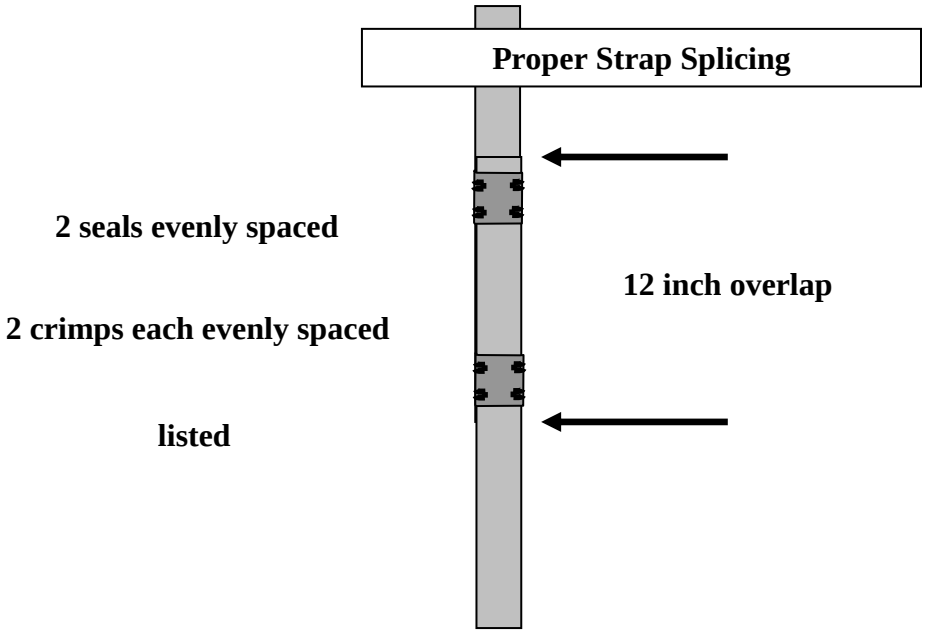

Where manufacturers have installed brackets on homes or where welded brackets have been installed, the approved method for installing straps to sidewall and centerline brackets is to loop the strap using a crimp seal with 2 crimps evenly spaced and protected by a radius clip. The radius clip must be installed on all marriage wall vertical tie-downs, shear wall brackets and welded longitudinal brackets (if applicable). Radius clips are made from 3" lengths of tie-down straps and bent to the configuration shown.

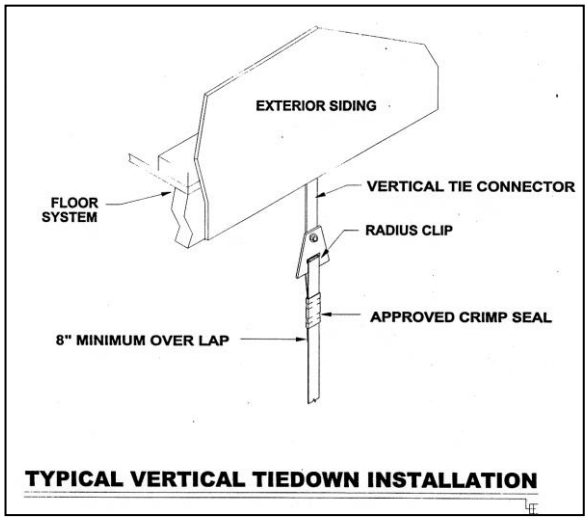

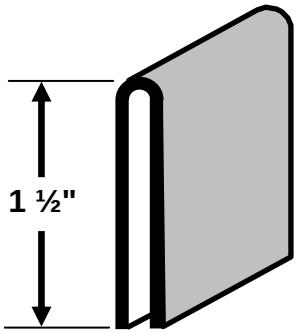

Radius Clip

ANCHORS AND TIE-DOWNS

Vertical Ties

Overturning occurs when vertical protection is insufficient.

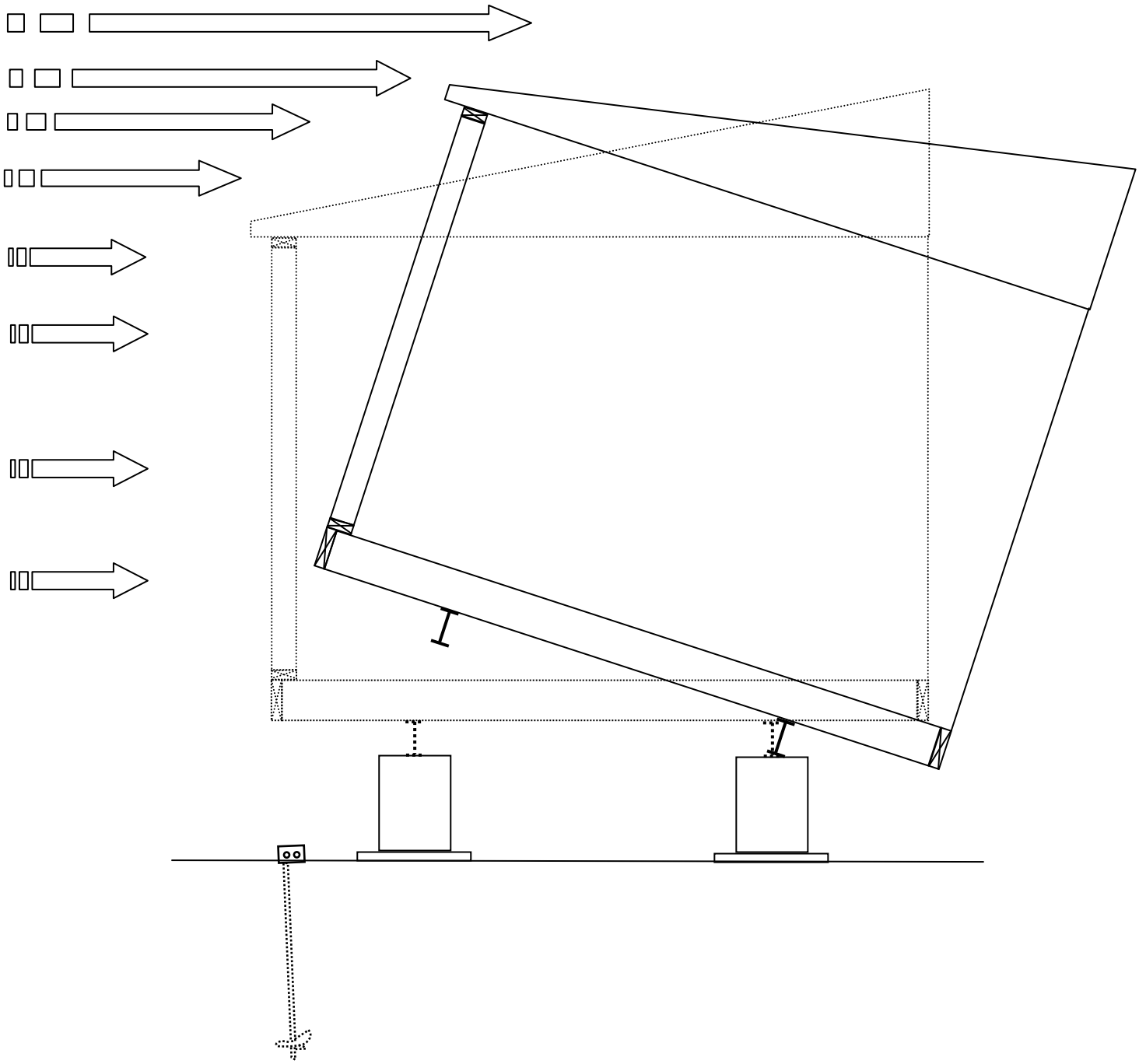

The vertical strap will help prevent overturning which is uplifting wind forces.

Stabilizer plates are not required with vertical straps that have no diagonal straps.

ANCHORS AND TIE-DOWNS

Vertical Ties

There are three types of vertical ties: sidewall, centerline and shear wall. All vertical ties help prevent homes from overturning. Wherever a manufacturer has installed brackets or straps, they must be attached to the proper ground anchor (Rule 15C-1.0104)(4)(b).

Centerline ties are required for all new and used multiple section homes. Centerline ties are to be secured to anchors with straps to the specifications in the manufacturer's manual or at the locations designated on the home. In addition to centerline ties specified by the manufacturer, a centerline tie must be attached within two feet (2') of each end of each section of the mobile/manufactured home. Where necessary, an approved bracket shall be added by the installer. ► ***Florida override*** ◄

Homes manufactured after June 15, 1976, without over-the-roof ties, but designated "Hurricane Resistant" per the Federal Manufactured Home Construction and Safety Standards, section 3280.305(c)(2), as hereby incorporated by reference, shall not require roof ties. All manufactured homes manufactured after July 13, 1994, shall require vertical and frame tie points.

Homes manufactured before July 13, 1994, where factory installed roof ties are not evident and it cannot be determined that the mobile/manufactured home is "Hurricane Resistant" without such ties, then the number of roof ties, as required by the table below, shall be installed so as to not contact with the structure, except at adequately reinforced areas, where additional load will not damage the structure.

1. Single-wide homes less than or equal to sixty feet (60') – three (3) roof ties.
2. Single-wide homes greater than or equal to sixty-one feet (61') – four (4) roof ties.
3. Double-wide homes – roof ties required only if installed by the manufacturer.

End roof ties or vertical ties shall be installed at not more than twenty-four inches (24") from the end of the structure or at the first stud and truss and attached to the same anchor as the frame tie. If the frame does not extend to the back end wall, then the roof tie shall be installed within six inches (6") of the end of the chassis. Intermediate roof ties or vertical ties shall then be located at midway or equally spaced between the end roof ties, as feasible.

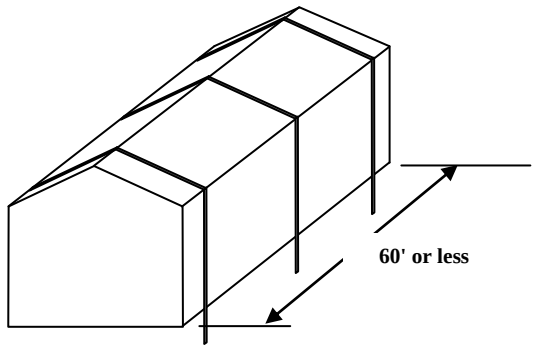

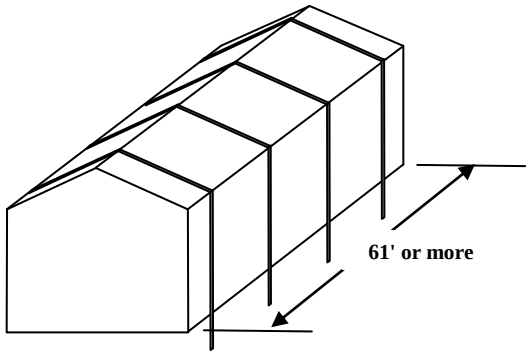

All new park trailers manufactured after January 2, 1995, shall have at least three (3) factory installed vertical tie points in addition to the required frame ties.

ANCHORS AND TIE-DOWNS

Frame ties (diagonal ties)

Horizontal sliding is the action seen here.

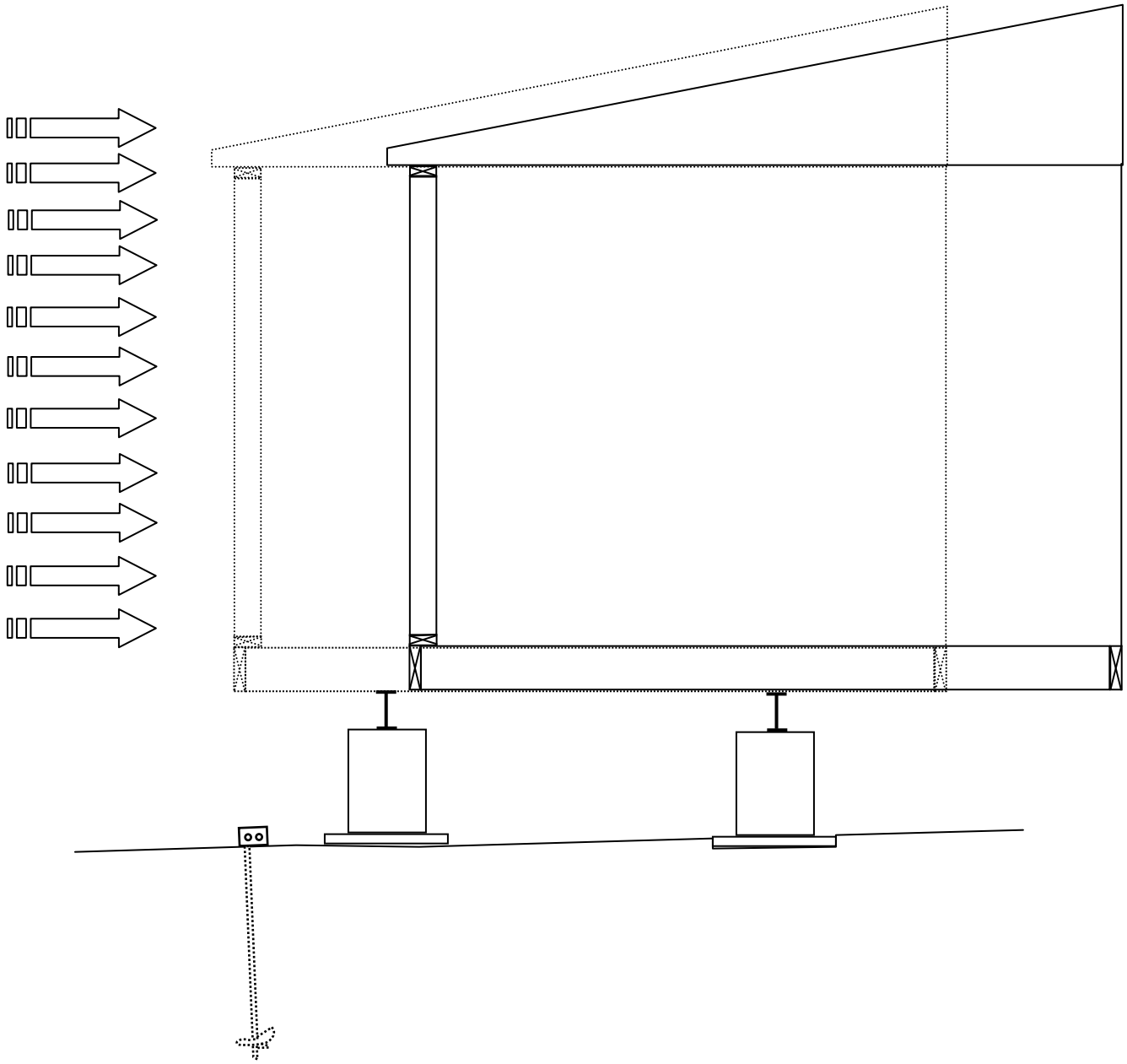

The frame or diagonal-tie strap will help prevent horizontal sliding also known as lateral movement.

Stabilizer plates are required on all diagonal strap applications.

ANCHORS AND TIE-DOWNS

Frame ties (diagonal ties)
Frame ties help prevent the home from moving horizontally and sliding off its foundation. All frame ties for new and used mobile/manufactured homes must have a factory fabricated strap connected at the top of the I-beam to a beam clamp approved by the department pursuant to rules 15C-1.0105 and 15C-1.0107.

► ***Florida override*** ◄ In other states HUD will allow frame clamps to attach to the bottom of the I-beam when the I-beam is reinforced to prevent rotation of the beam. Florida requires the frame clamp be attached to the top of the I-beam only.

► ***Florida override*** ◄ Frame tie-downs for new and used mobile/manufactured homes, in all wind zones, shall be spaced no farther apart than five feet four inches (5' 4") on center with anchors placed within two feet (2') of each end. Note: In some cases HUD may require spacings closer than 5' 4". Where sidewall strap separation is greater, they must be tied individually. Each frame tie shall be installed to the component manufacturer's instructions.

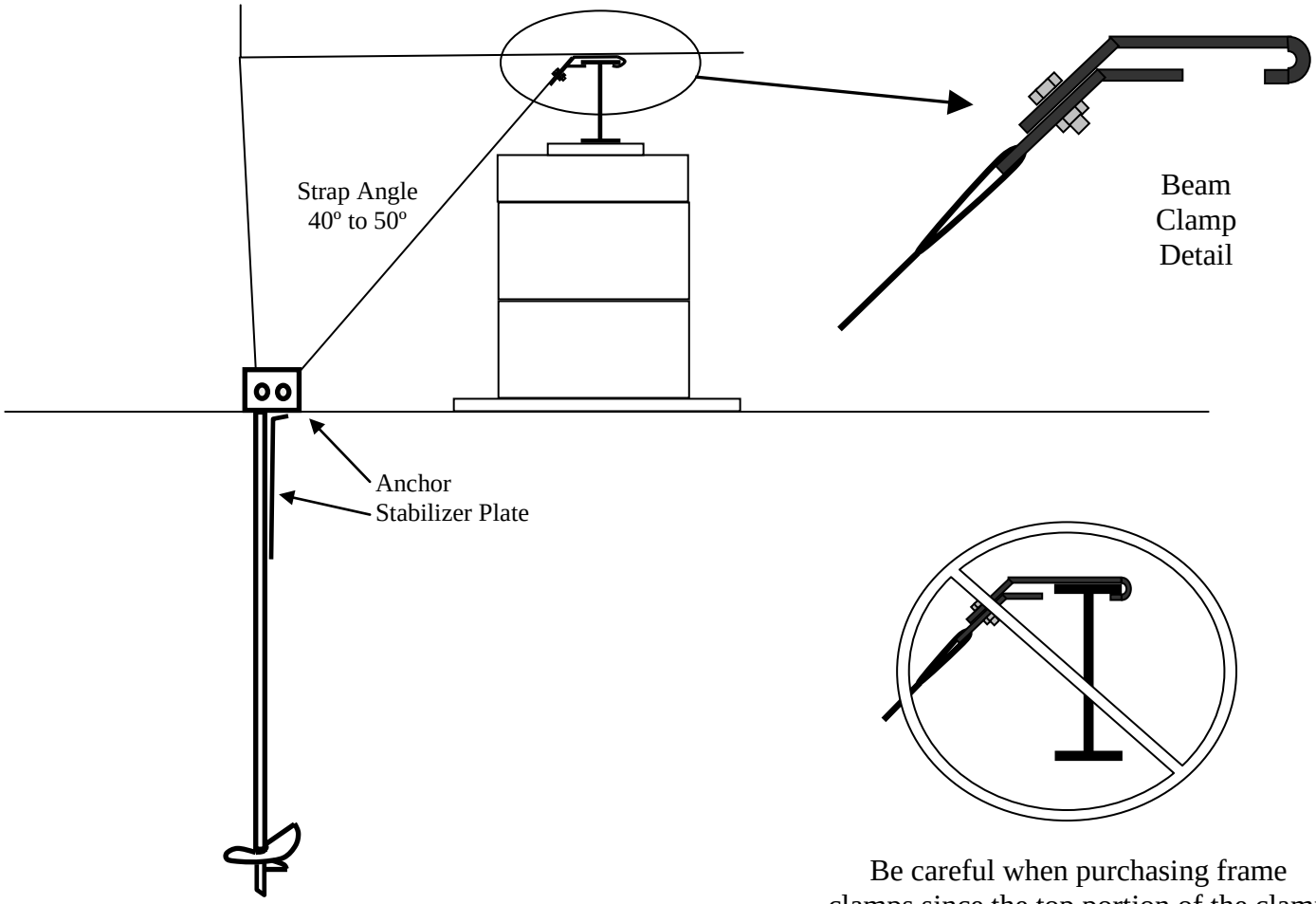

Be careful when purchasing frame clamps since the top portion of the clamp is manufactured in different widths.

ANCHORS AND TIE-DOWNS

Centerline ties; also known as mate line or marriage wall ties

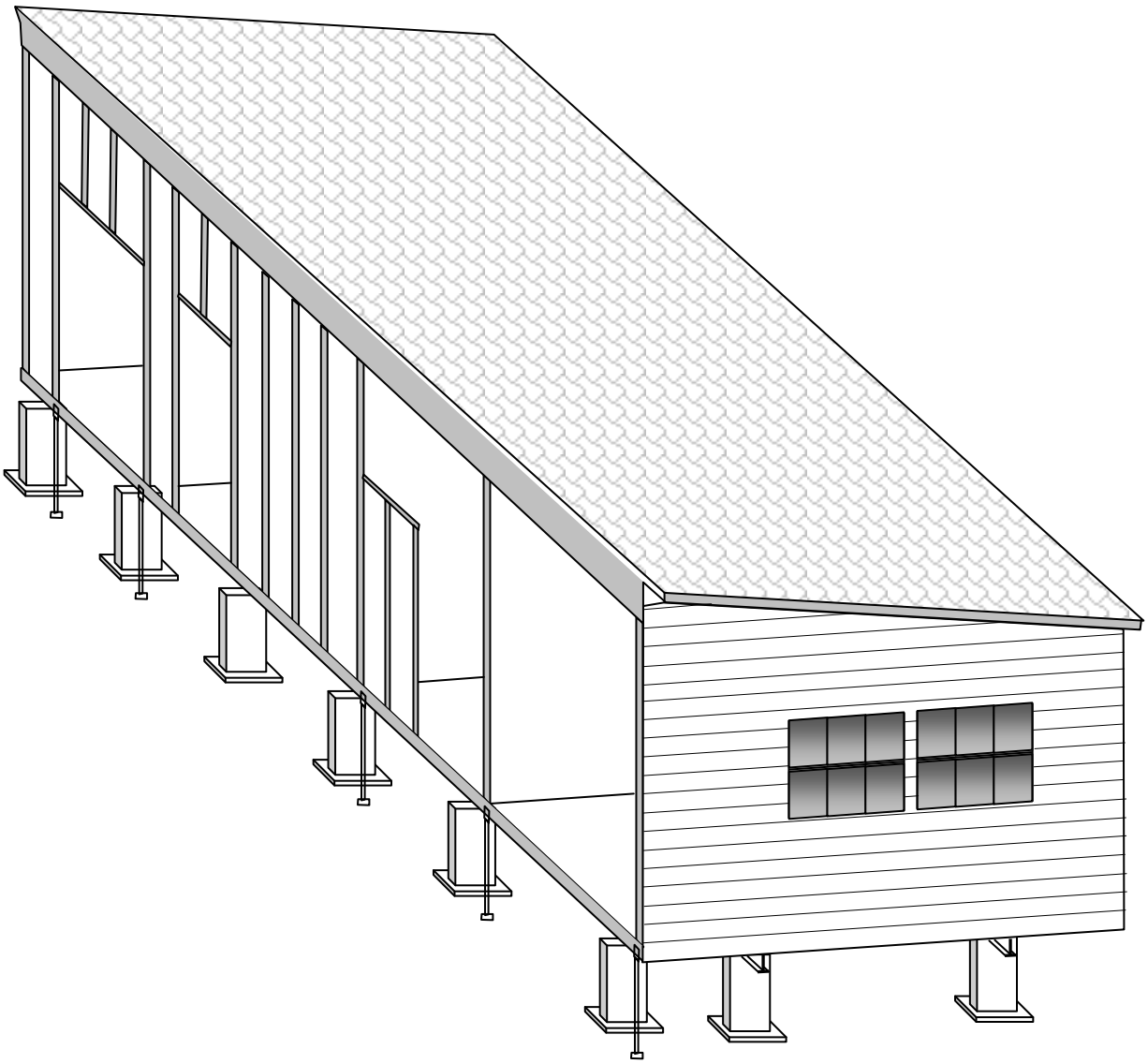

Centerline ties are required for all new and used multiple section homes. These homes are to be secured at the centerline with straps to the specification in the manufacturer's manual or at the locations designated on the home.

► ***Florida override*** ◄ In addition to centerline ties specified by the manufacturer, a centerline tie must be attached within two feet (2') of each end of each section of the mobile/manufactured home. ***Where necessary, an approved bracket shall be added by the installer.***

ANCHORS AND TIE-DOWNS

Shearwall ties

Shear walls are specially built walls inside the home and help the home from collapsing.

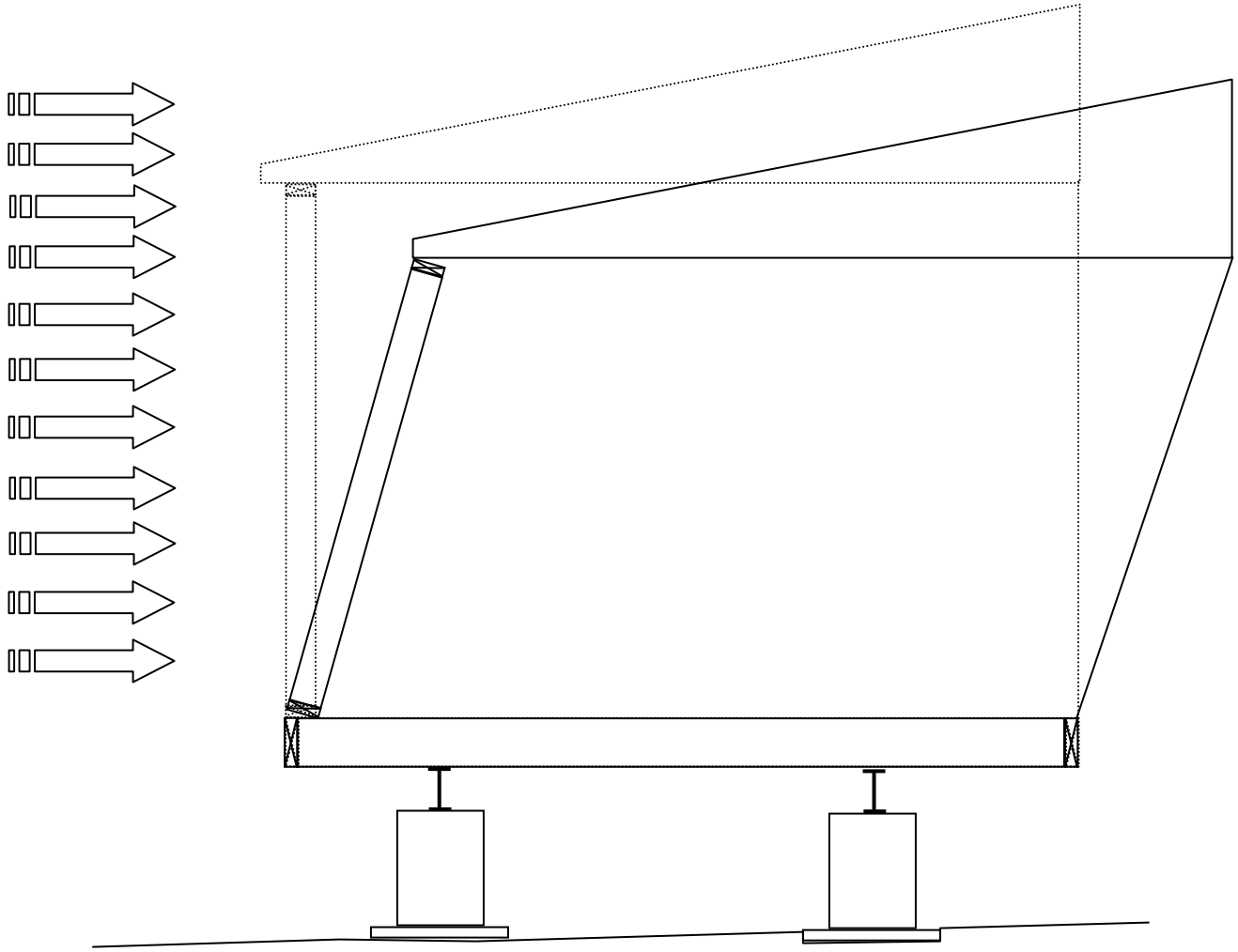

Additional anchorage is needed at shear wall locations specified by the manufacturer. Shear wall anchors may be located and/or attached to a sidewall bracket, to either I-beam, to a floor joist or to the centerline perimeter rail. Refer to each manufacturer's installation instructions for proper location of shear walls and anchor placement. In the case of used homes, an installer must install anchors to any strap or bracket on a home either sidewall or centerline. Any bracket on the sidewall or centerline shall get strapping and an anchor installed.

ANCHORS AND TIE-DOWNS

Concrete anchors.

When using concrete anchors carefully follow the manufacturer's installation instructions. The instructions will describe the maximum load per anchor and the minimum slab area per bolt such as:

4" slab - 95 sq. ft. of concrete slab
6" slab - 65 sq. ft. of concrete slab
8" slab - 48 sq. ft. of concrete slab

Also, look for the dimension from the center of the bolt to the edge of the concrete. The anchors must be listed with the approval number stamped into the head of the anchor.

Double head concrete anchor with expansion bolt

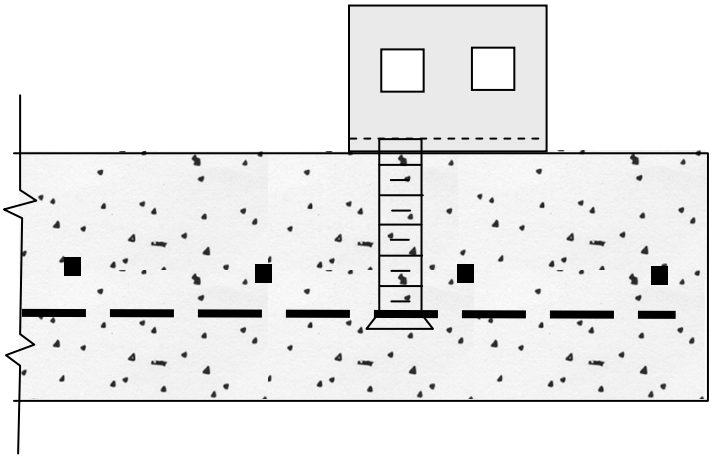

Double head "J" hook concrete anchor

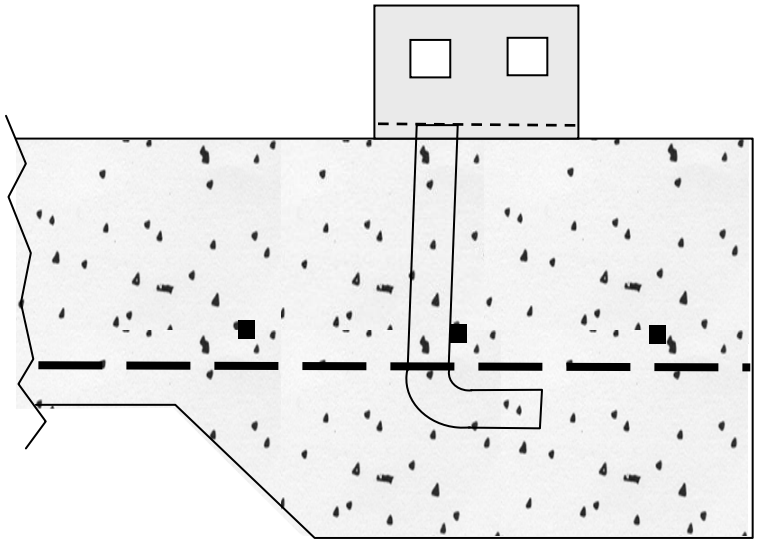

ANCHORS AND TIE-DOWNS

Longitudinal Protection

Longitudinal tie-downs are designed to resist horizontal wind loads in the long direction of the home; i.e., wind loads applied to the ends of the home.

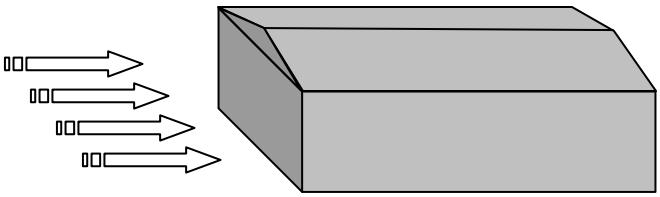

The longitudinal tie-downs are in addition to the anchoring systems required along the exterior side walls and/or marriage walls of the mobile/manufactured home.

When anchors and straps are used for stabilizing the home in the longitudinal direction the strap must connect to a clip welded onto the I-beam or other device connected mechanically. Unless factory installed, the connection device must be approved by the department. At least four (4) anchors and straps are required (i.e., 16 per double-wide home) at the end of each section of the mobile/manufactured home.

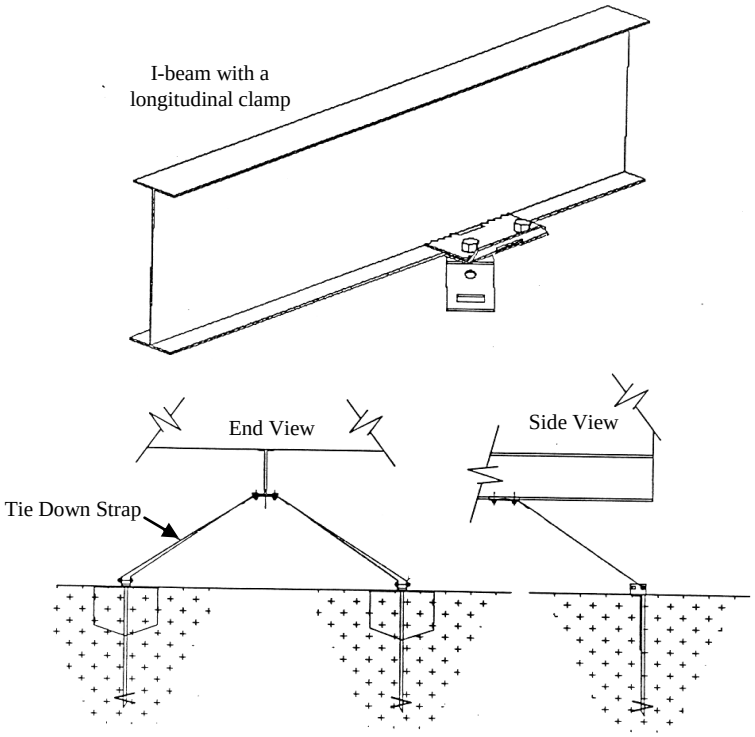

Longitudinal Protection
using approved ground anchors,
strapping and stabilizer plates

ANCHORS AND TIE-DOWNS

Longitudinal protection, continued

Longitudinal protection can be in the form of I-beam clamps, straps, anchors with stabilizer plates on each I-beam. Two straps, anchors and stabilizer plates are needed for each I-beam. A double wide home would get 8 straps, anchors and stabilizer plates.

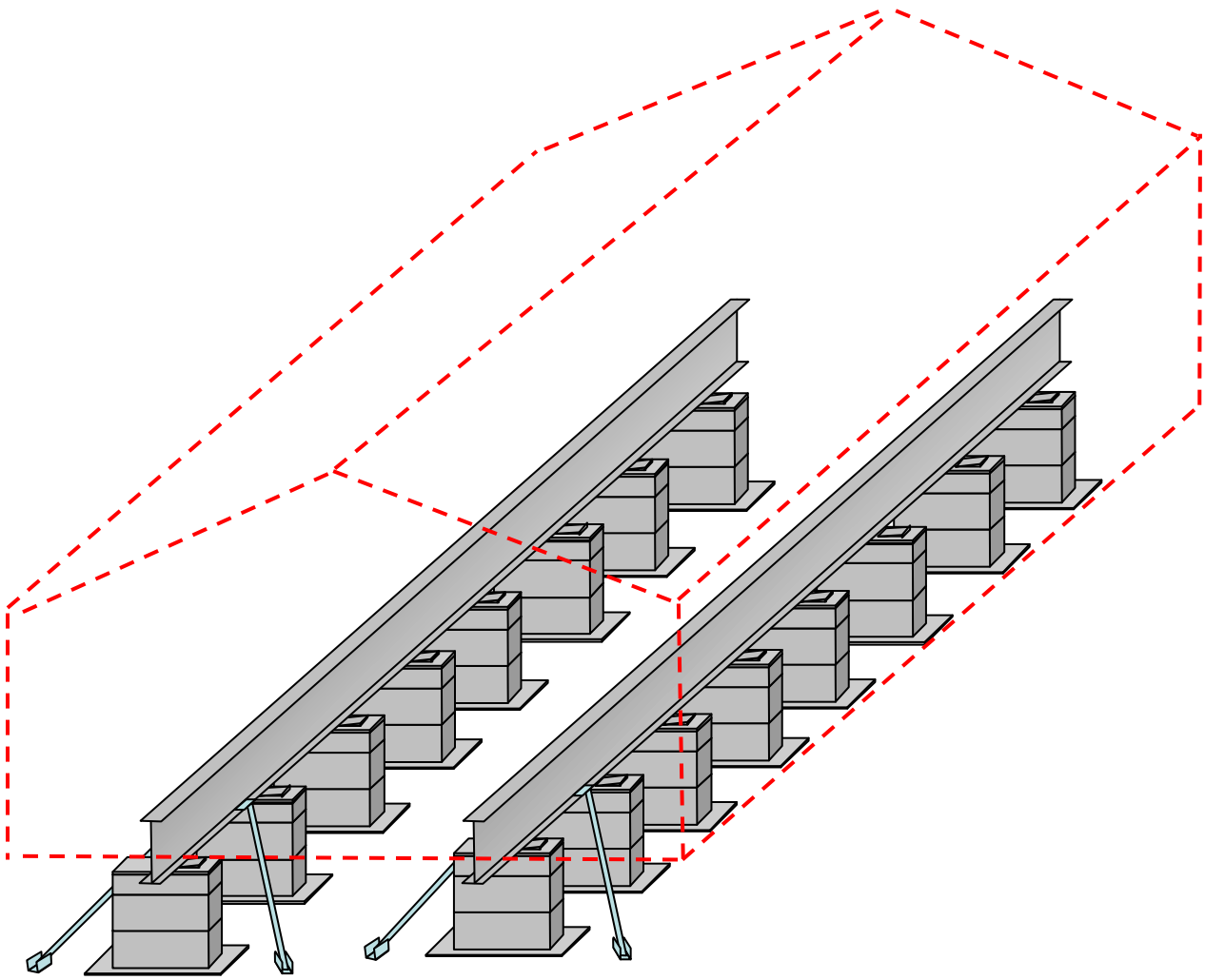

ANCHORS AND TIE-DOWNS

Longitudinal protection, continued

Other approved longitudinal stabilization are these types of steel mechanical systems called longitudinal stabilizing devices.

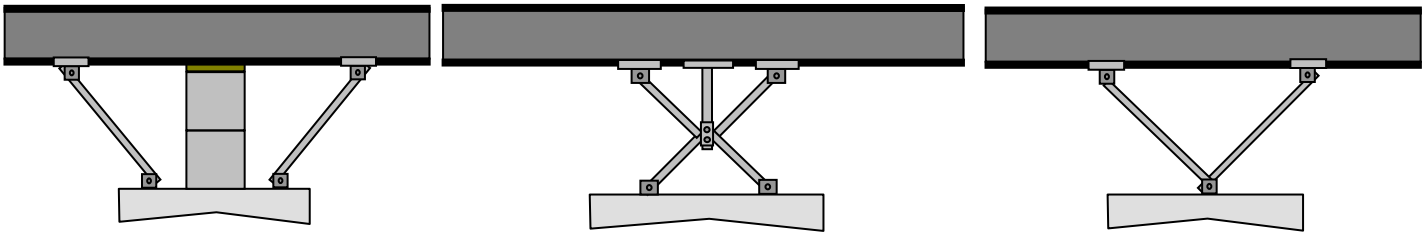

Longitudinal Protection using approved Longitudinal Stabilizing Devices (LSDs)

LSD systems may be used in place of the required longitudinal straps, anchors and stabilizer plates. Two systems are required per section of home. A single wide will get two LSDs and a double wide will require four and a triple wide will require six. For the correct placement of these systems see the diagram below.

Commonly found violations when using the lateral arm systems:

- The required self tapping screws were not installed or another type of screw was used.
- The LSD arms were not properly connected to the I-beam or galvanized pan.
- Five foot anchors were required by the home manufacturer and 4 foot anchors were installed.
- The LSD arms are installed at too steep an angle.
- The galvanized pan is not fully embedded into the soil.

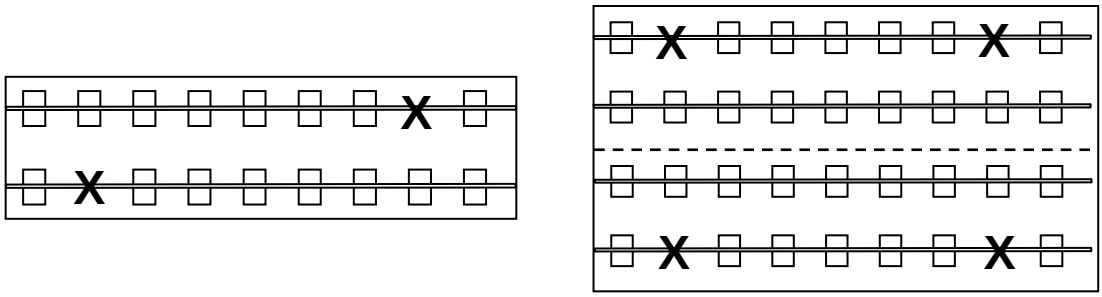

Longitudinal Stabilizing Devices shown on typical blocking plans.

ANCHORS AND TIE-DOWNS

Longitudinal protection, continued

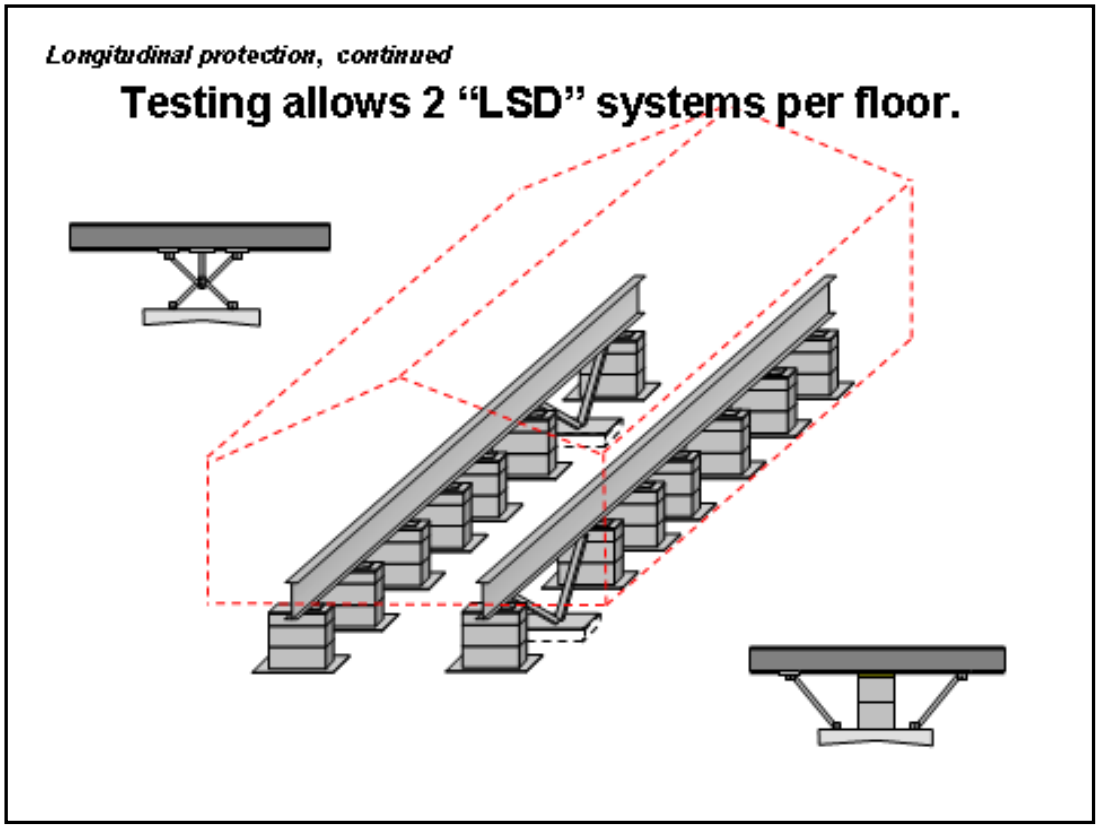

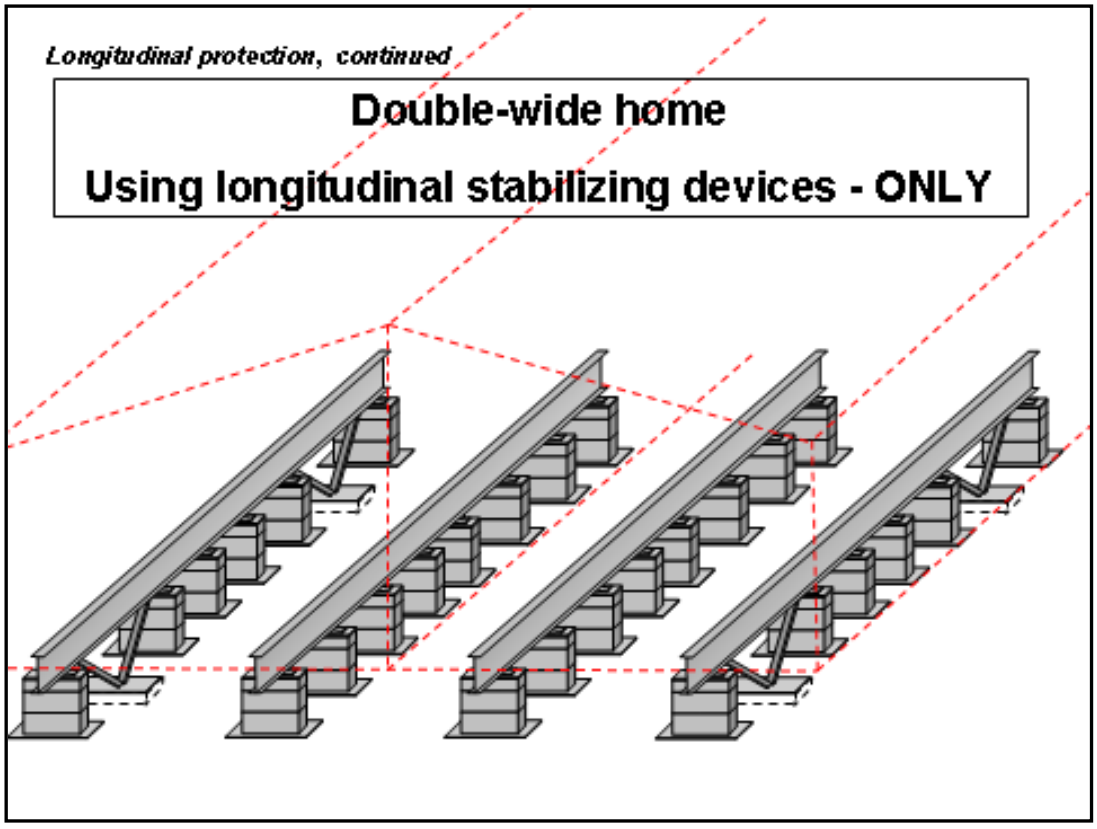

ANCHORS AND TIE-DOWNS

Lateral Arm Systems

Lateral arms are square galvanized steel telescoping square tubes that are attached at one end to the longitudinal stabilizing device's (LSD) galvanized pan (in some cases concrete). The other end is attached to the top of the far I-beam. The telescoping arms require 4 self tapping screws to be installed (two on each side). Lateral arms are totally independent from the longitudinal stabilizing devices, but just happen to share the same galvanized pan.

An advantage, in some cases, is that an installer may leave off the required frame ties every 5' 4". However, one frame tie, anchor and stabilizer is required at every lateral arm location.

One requirement of the lateral arm system is the use of vertical ties spaced at 5' 4" on center. If a used home does not have vertical ties spaced at 5' 4" the lateral arm systems cannot be used. An installer cannot add vertical ties to the sidewalls.

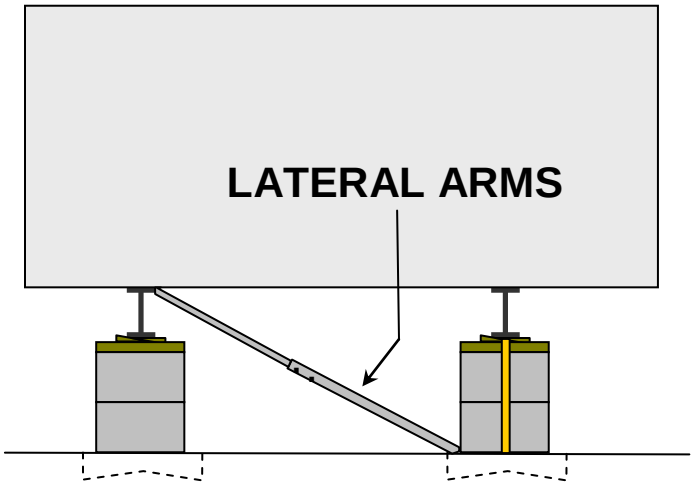

Manufacturer's installation instructions must contain the following prescriptive requirements.

1. The use of this system requires sidewall vertical ties at no greater than 5' 4" on center and allows for the use of 4 foot anchors.
2. Centerline anchors to be sized according to soil torque conditions. Any manufacturer's specifications for sidewall anchor loads in excess of 4000 pounds requires a 5 foot anchor.
3. Each system is required to have a frame tie and stabilizer plate attached at each lateral arm location.
4. Four lateral arms are required for homes up to 52 feet in length. Six lateral arm systems are required for homes 52 feet in length and longer.
5. For homes with roof pitches of 5/12 or greater: Six (6) lateral arms up to 52 feet in length and eight (8) lateral arms 52 to 80 feet in length.

ANCHORS AND TIE-DOWNS

Lateral Arm Systems, continued

Commonly found violations when using the lateral arm systems:

- The required self tapping screws were not installed or another type of screw was used.
- The lateral arms were not properly connected to the I-beam or galvanized pan.
- Five foot anchors were required by the home manufacturer and 4 foot anchors were installed.
- Too few lateral arm systems were used on longer homes.

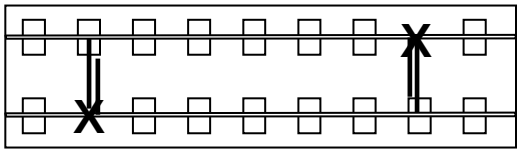

Single wide home up to 52' in length showing two LSDs and 4 lateral arm systems.

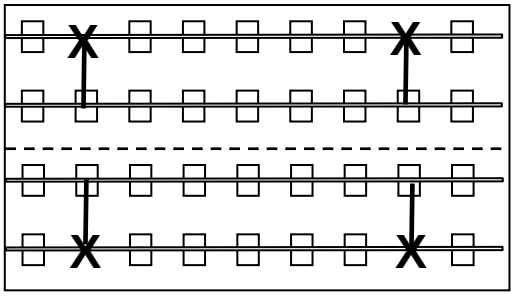

Double wide home up to 52' in length showing four LSDs and 4 lateral arm systems.

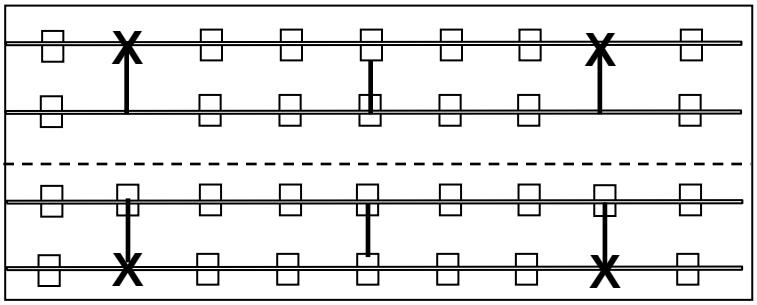

Double wide greater than 52' in length showing four LSDs and 6 lateral arm systems.

For homes with roof pitches of 5/12 or greater: Six (6) lateral arms up to 52 feet in length and eight (8) lateral arms 52 to 80 feet in length.

ANCHORS AND TIE-DOWNS

Lateral Arm Systems, continued

Tie Down Engineering

using lateral arms with and without the longitudinal stabilizing devices.

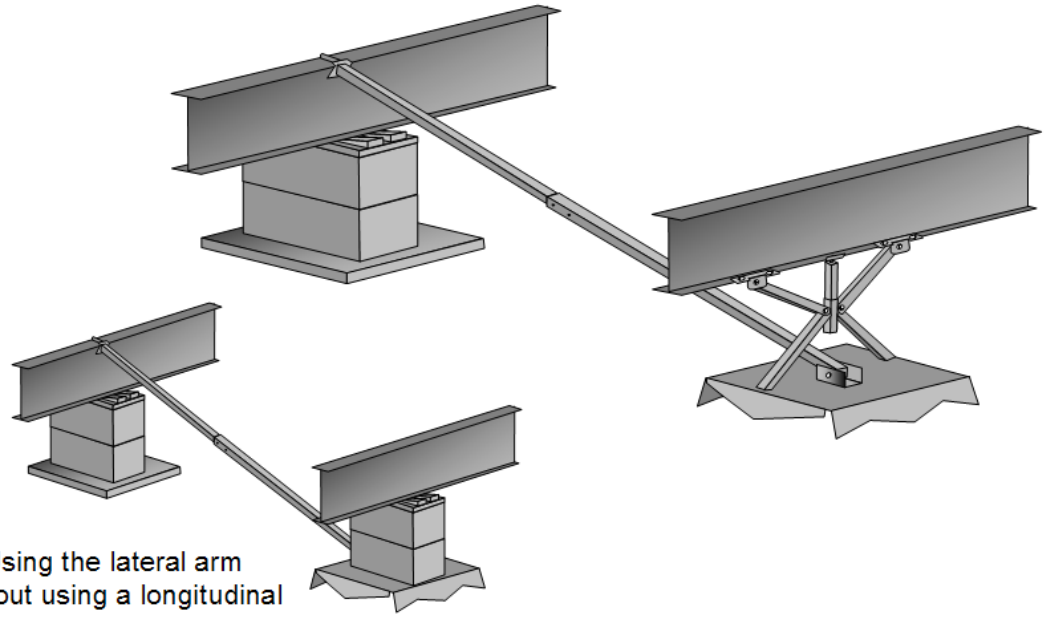

Using the lateral arm without using a longitudinal stabilizing device.

Tie Down Engineering

Using the correct number of lateral arms and longitudinal stabilizing devices.

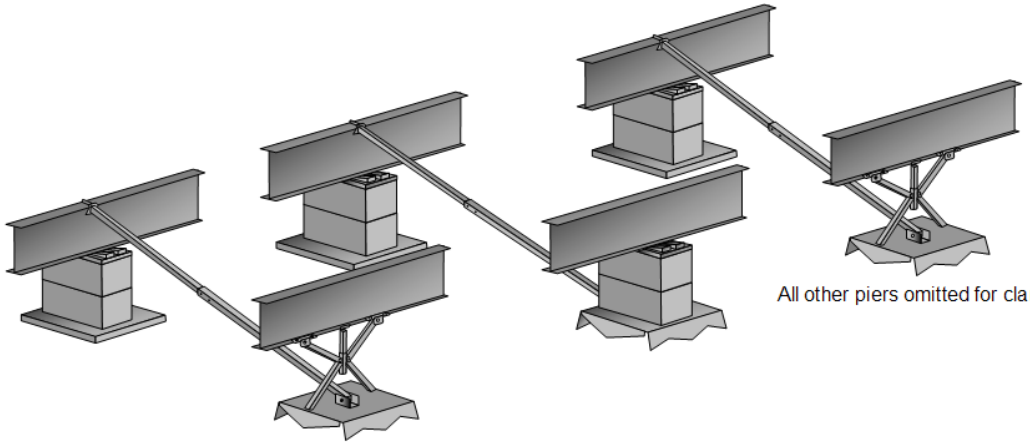

All other piers omitted for clarity.

When using longitudinal stabilizing systems only.

One section of a double wide home 50 feet long gets how many longitudinal systems? **2**

One section of a double wide home 56 feet long gets how many longitudinal systems? **2**

When using longitudinal stabilizing systems with lateral arms.

One section of a double wide home 50 feet long gets how many lateral systems? **2** longitudinal systems? **2**

One section of a double wide home 56 feet long gets how many lateral systems? **3** longitudinal systems? **2**

ANCHORS AND TIE-DOWNS

Lateral Arm Systems, continued

Minute Man Anchor LLBS System

using lateral arms with and without the longitudinal stabilizing systems.

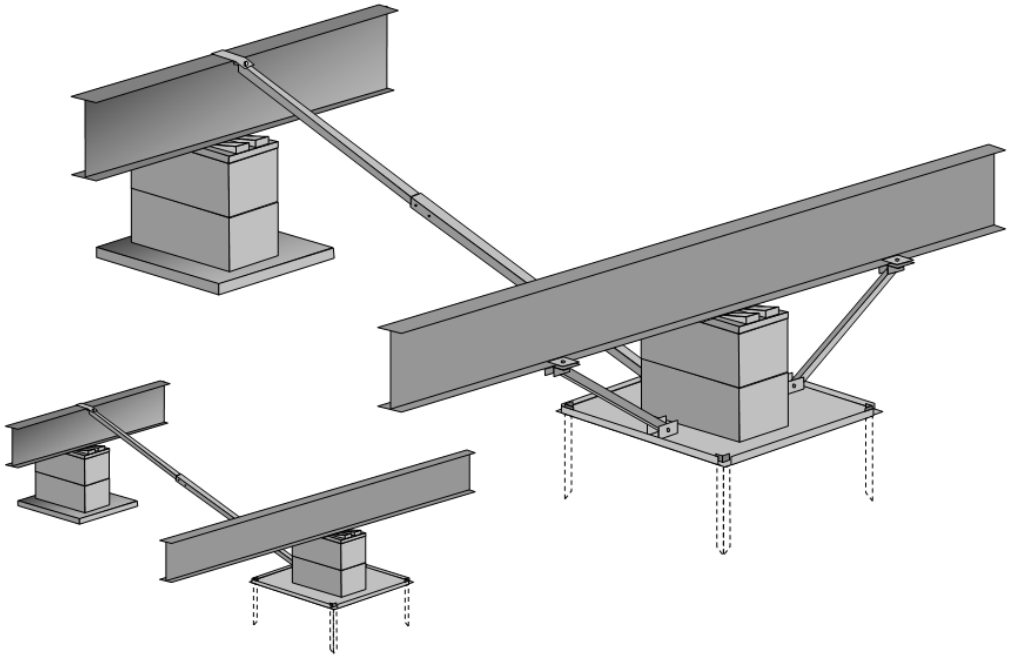

Using the lateral arm without using a longitudinal stabilizing device.

Minute Man Anchor LLBS System

using lateral arms with and without the longitudinal stabilizing systems.

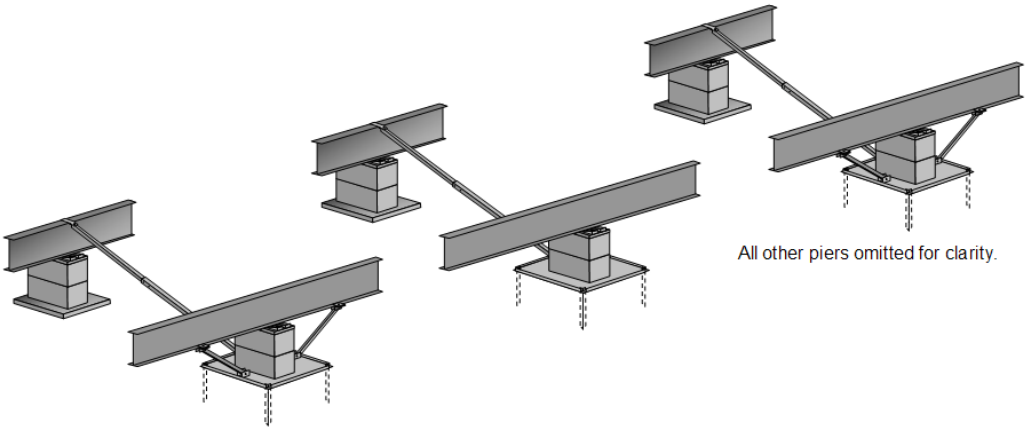

All other piers omitted for clarity.

When using longitudinal stabilizing systems only.

One section of a double wide home 50 feet long gets how many longitudinal systems? **2**

One section of a double wide home 56 feet long gets how many longitudinal systems? **2**

When using longitudinal stabilizing systems with lateral arms.

One section of a double wide home 50 feet long gets how many lateral systems? **2** longitudinal systems? **2**

One section of a double wide home 56 feet long gets how many lateral systems? **3** longitudinal systems? **2**

ANCHORS AND TIE-DOWNS

Lateral Arm Systems, continued

Oliver Technologies

using lateral arms with and without the longitudinal stabilizing systems.

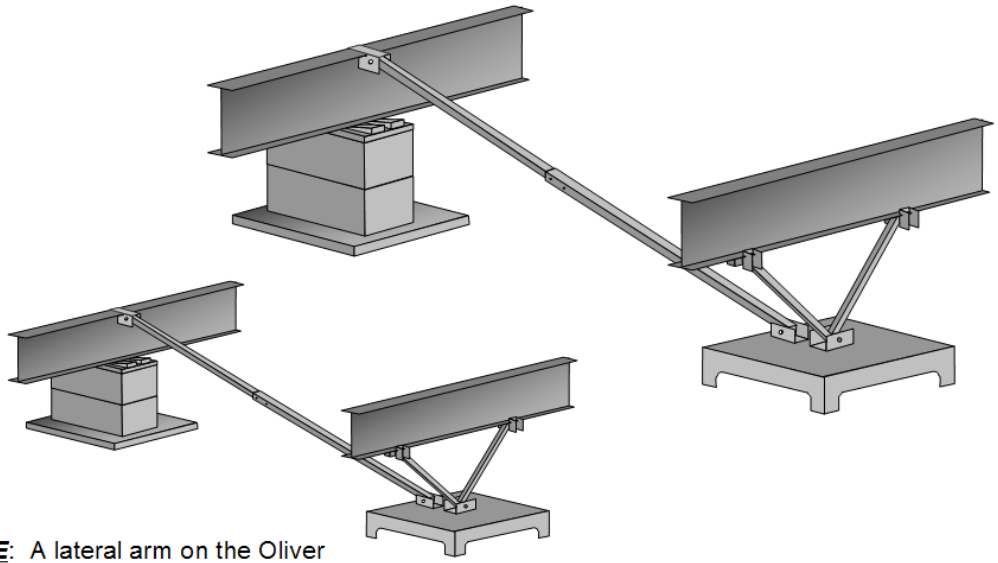

NOTE: A lateral arm on the Oliver System cannot be used without a longitudinal stabilizing device.

Oliver Technologies

using lateral arms with the longitudinal stabilizing systems.

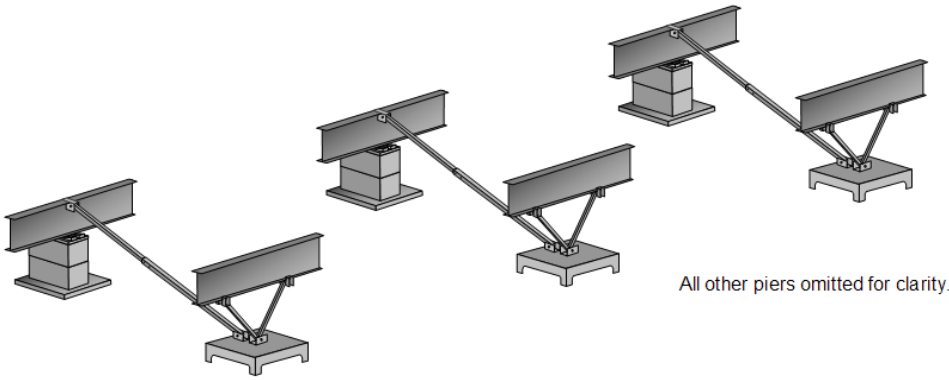

All other piers omitted for clarity.

When using longitudinal stabilizing systems only.

One section of a double wide home 50 feet long gets how many longitudinal systems? **2**

One section of a double wide home 56 feet long gets how many longitudinal systems? **2**

When using longitudinal stabilizing systems with lateral arms.

One section of a double wide home 50 feet long gets how many lateral systems? **2** longitudinal systems? **2**

One section of a double wide home 56 feet long gets how many lateral systems? **3** longitudinal systems? **3**

ANCHORS AND TIE-DOWNS

Two other systems are approved in the State of Florida for longitudinal protection and lateral protection.

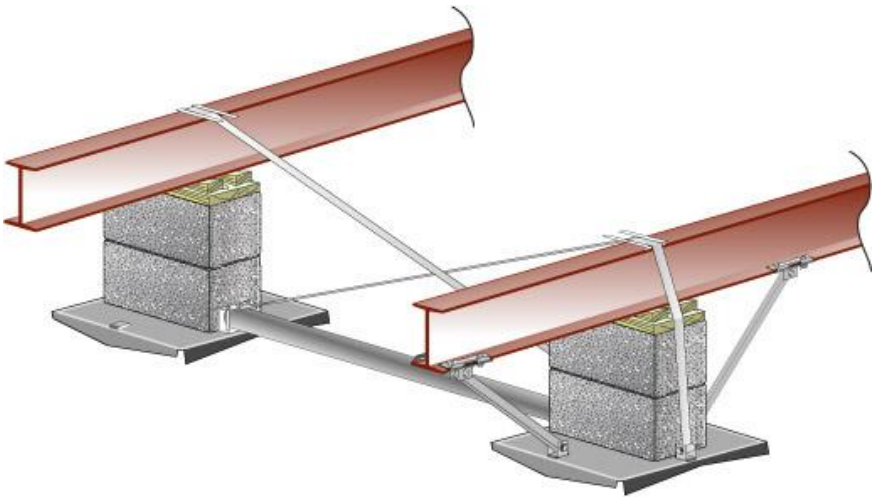

The Vector System
Tie Down Engineering

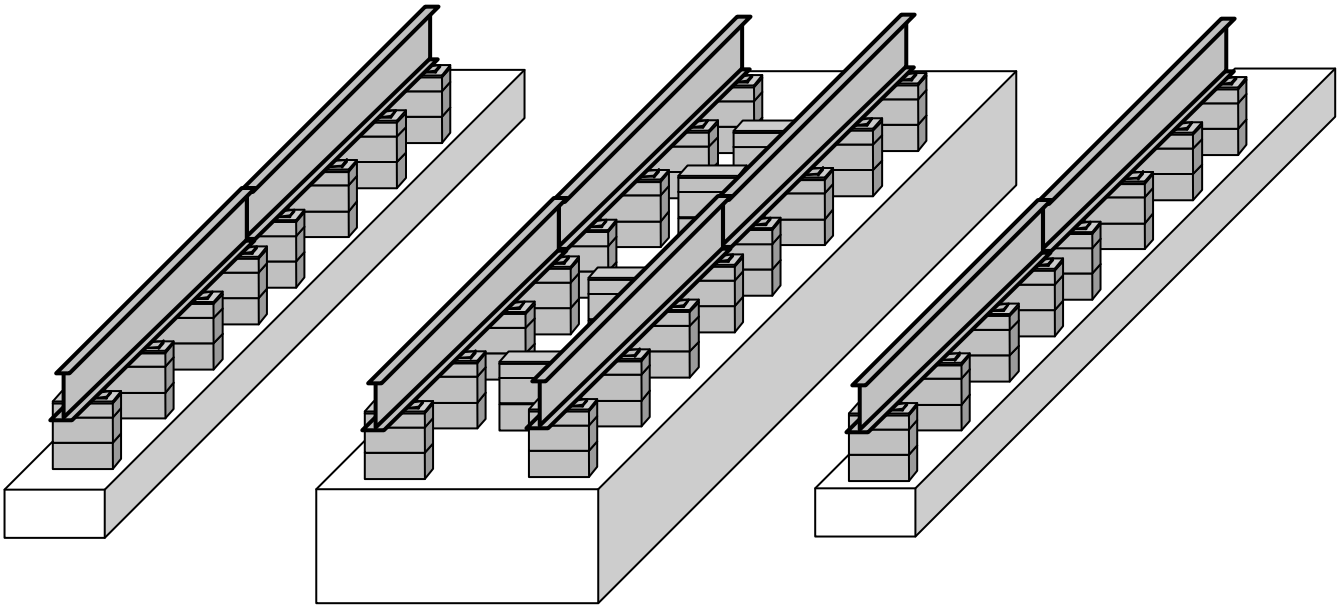

The Byrd Poured Concrete Foundation System

CLOSE UP

Gasket

For new homes, manufacturers will provide materials and designs for mate-line gaskets or other methods designed to resist entry of air, water vapor, insects, and rodents at all mate-line locations exposed to the exterior. For used homes an installer must provide and install the gasket before the home's sections are moved into place and fastened. An installer cannot efficiently install the gasket after the home has been connected together. Inside wall panels will have to be removed to install a gasket after the home is connected. ***The gasket is required to be installed at the bottom of the ridgebeam.***

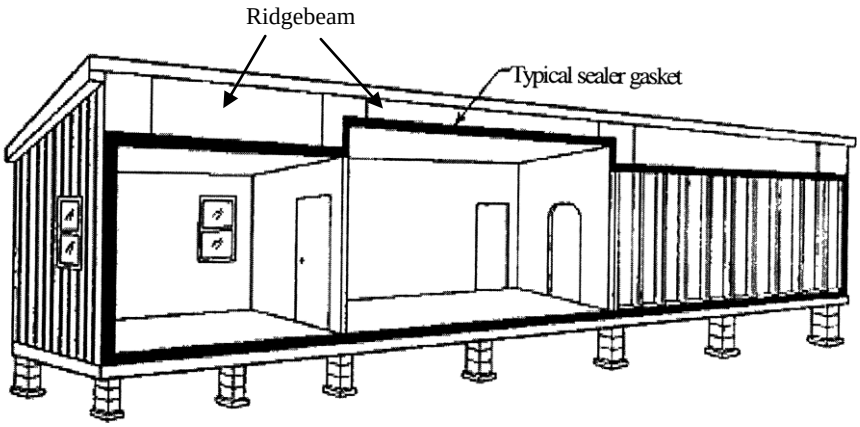

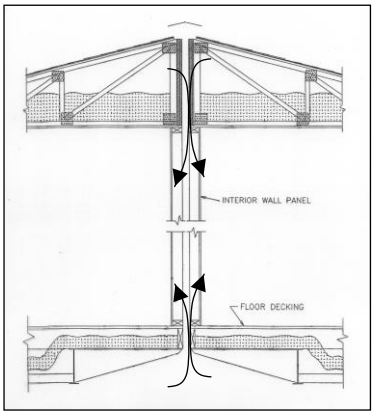

Structural Interconnection of multi-section homes

An installer is required to closely follow the manufacturer's installation manual when connecting new homes together. Gaps are allowed up to one inch if they are shimmed with dimensional lumber and fastener lengths increased to provide adequate penetration into the receiving member. Do not forget the gasket. Some manufacturers require fasteners at interior ridge beam support posts. Used homes (if the installation manual is not available) require mechanical fasteners every 24 inches at the bottom, roof and walls. On new homes, if the manufacturer does not require end wall fastening, Florida Rule 15C-1 requires end walls to be fastened every 24" on center. ◄ ***Florida override*** ►

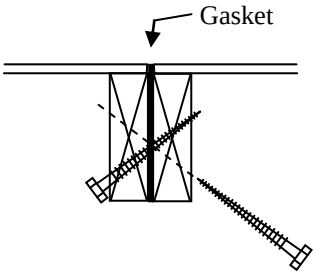

Floor connection

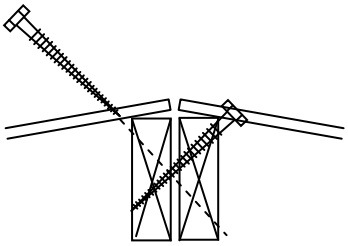

Roof connection

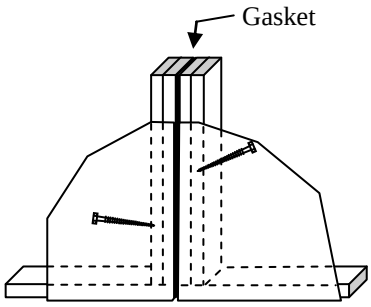

End wall connection

CLOSE UP

Each installer who installs a mobile/manufactured home shall warrant the installation and weather sealing, including sealing the bottom board of the home to prevent air infiltration of the home.

Roof Close Up

Used Homes

Multi-section homes shall be mechanically fastened every twenty-four inches (24") at the roof. A minimum thirty (30) gauge, eight inches (8") wide, galvanized strip shall be centered over the peak and fastened with galvanized roofing nails at two inches (2") on center at both sides of the center line.

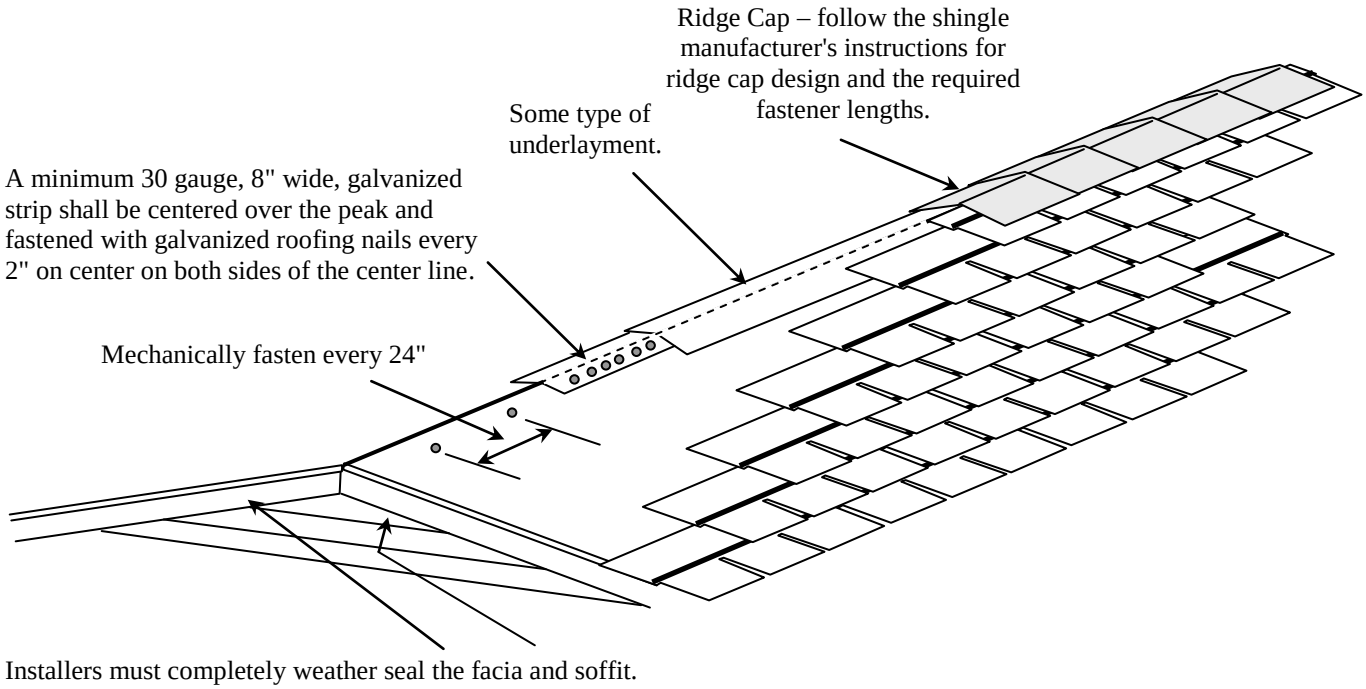

Shingle installation

An installer must follow the shingle manufacturer's installation instructions when installing shingles in Florida. Six fasteners are required in each shingle just below the tar line. Remove any wind screens fasteners or netting placed on the roof by the manufacturer and seal the fastener holes.

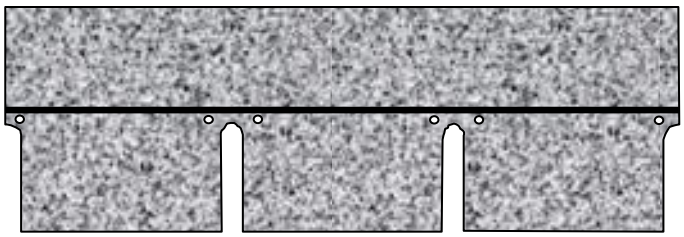

Roof Close Up

New Homes

One critical area of making the home weather tight is closing up the roof at the peak of the home. By not following the manufacturer's installation manual, you could easily void the warranty on some parts of the home. Each manufacturer will be different so, an installer must carefully follow each manufacturer's manual.

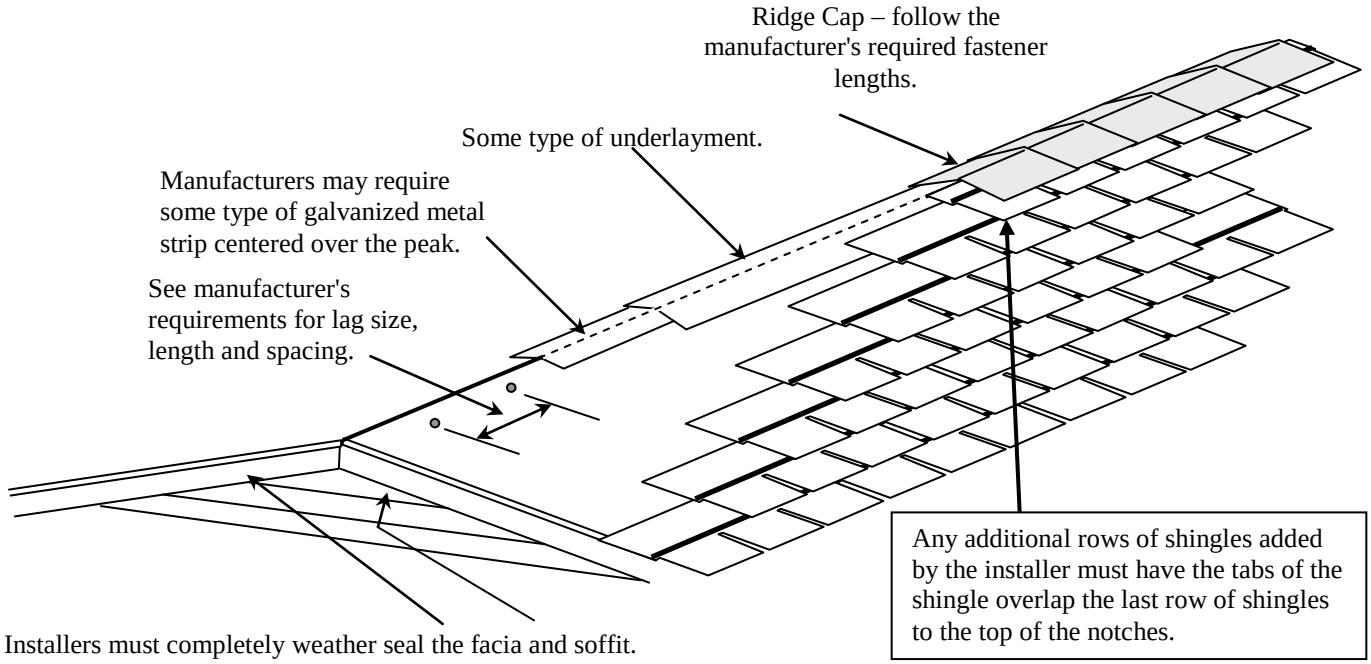

Diagram below shows a required installation of a roof HVAC cross over duct.

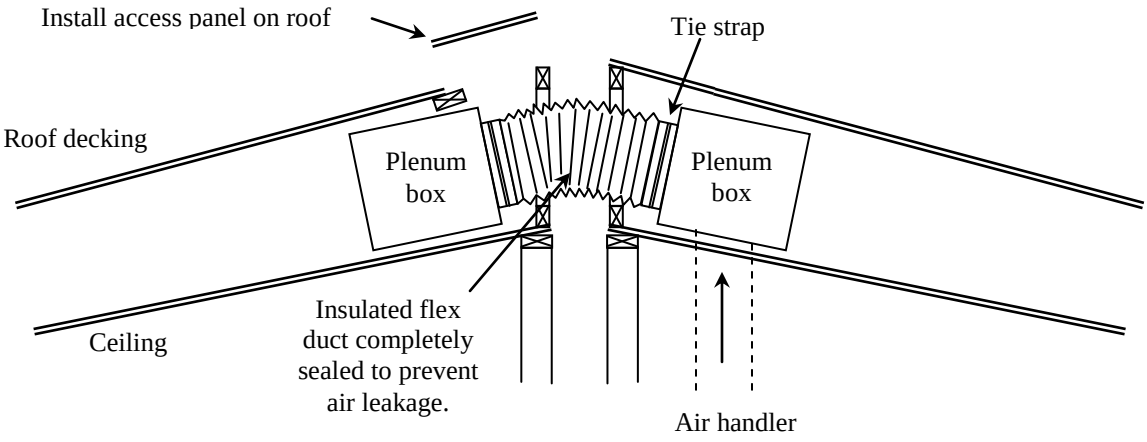

CLOSE UP

Hinged Roofs

If the home has a hinged roof that has been folded down for shipping, raise the roof using a crane or roof jacks following the manufacturer's installation manual. For example:

1. Position lift points. Space roof lift points equally along the length of the roof with no more than five feet from the end of the roof. Use three lift points for a roof up to 48 feet long (excluding overhangs), four lift points for up to 60 feet, and five lift points for up to 72 feet.
2. Remove fasteners. Remove any temporary fasteners connecting the hinged portion of the roof to the vertical king post.
3. Lift roof. Raise the roof to its intended height. A temporary slight over extension may be required during lifting. *DO NOT* overextend the roof and damage the hinge. Raise the roof evenly in small increments; keep it level throughout the entire process to prevent racking. Roofing paper and shingles should not get caught in the hinge crease.
4. Secure king post. Position the hinged king posts (may be called a knee wall) atop the fixed king posts or against the wooden stop. The king posts are either hinged to the underside of the hinged-truss top chord or shipped loose as a knee wall and stored in the roof cavity. Position them as needed to level the roof, aligning each king post with the king post directly beneath it, and fastening it in place following the manufacturer's installation instructions.

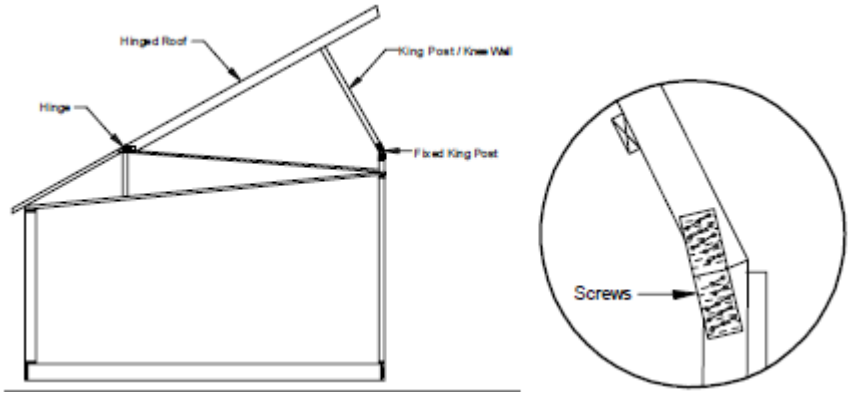

5. Install bracing (if required). Install diagonal bracing at both ends of each home section from the top of the gable end truss approximately 45 degrees downward. Keep trusses plumb and secure the brace by following the manufacturer's installation instructions.

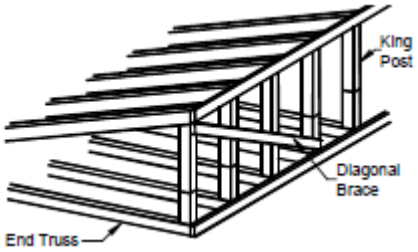

6. Unfold double hinge. If the roof has a double hinged top chord, unfold and secure the second hinge following the manufacturer's installation instructions.

CLOSE UP

Hinged Roofs

7. Fasten sheathing (if required). Fasten sheathing from the upper portion of the roof to the lower fixed portion of the roof just below hinges.

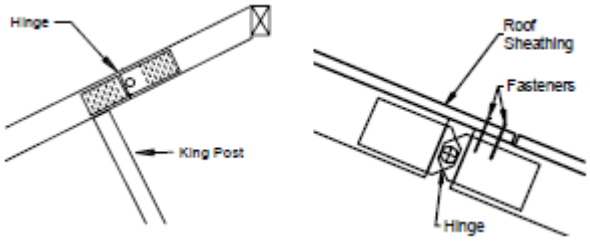

8. Redistribute insulation. Before closing up the attic space check that the insulation has not shifted. Re-level the insulation if needed.
9. Install gable walls. Assembled frames or wall studs and sheathing needed for the site assembly of the gable end walls and interior shear wall knee walls may be provided. Install the gable end walls for each section.

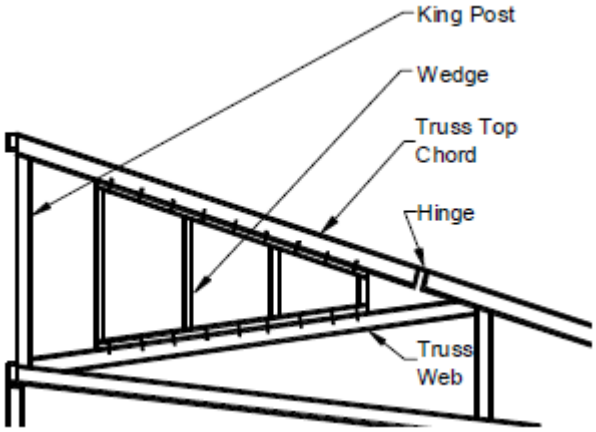

10. Install vents. Extend plumbing vents, exhaust fans, appliance vents, and fireplace stacks through the hinged portion of the roof in accordance to the manufacturer's installation manual.
11. Install ridge assembly sometimes call the crow's nest (if required) by following the manufacturer's installation manual.

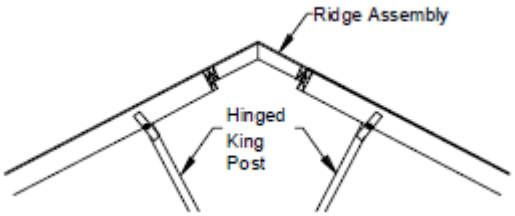

CLOSE UP

Installation of Field-Applied Horizontal Lap Siding

Multi-section homes with horizontal-lap siding can be shipped with no siding on the front and rear end walls. The installer is to install the siding in accordance with the manufacturer's installation instructions.

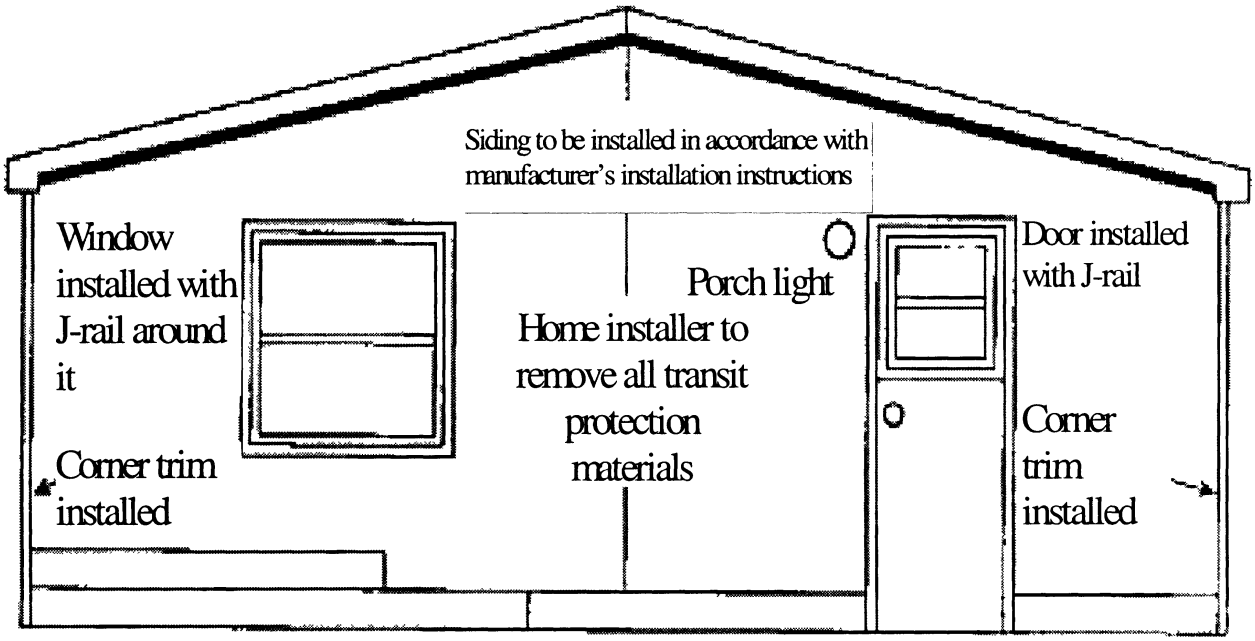

Basic Rules of Vinyl Siding Application

1. Review the manufacturer's installation instructions.
2. Fasten nails in the center of slot.
3. Do not fasten too tightly or loosely and allow 1/32"clearance between the fastener head and the siding panel.
4. Leave a minimum of ¼" clearance at all openings and stops to allow for normal expansion and contraction.
5. Do not force panels up or down when fastening in position. Allow them to hang without strain. Make sure the panels are locked at the bottom, but do not pull them tight when nailing.
6. Installed panels must move freely from side to side.
7. Over lap ends 1" minimum or to manufacturer's installation instructions.
8. Select proper size fastener. Use aluminum, galvanized steel or other corrosion-resistant nails or staples. The fastener should be long enough to allow for ¾" penetration into a solid wood member. Roofing nail generally work well. Refer to the manufacturer's installation manual.
9. Space nails/staples a maximum of 16" apart for horizontal-lap siding panels.

CLOSE UP

Installation of Field-Applied Horizontal Lap Siding

Siding necessary to complete the exterior has been provided with the home. Follow the siding manufacturer's instructions (found on or with the packaging or as an addendum to this manual) and to complete the exterior siding as follows:

1. **Remove shipping protection.** Remove temporary shipping protection from walls.

2. **Complete crossovers.** Complete any crossover connections in the walls, including: electrical, stereo speaker, doorbell, telephone, and intercom wires.
.
3. **Install siding.** Fasten siding only at stud locations, avoiding electrical wires that are present in the walls.

4. **Install close-up of strips.** If siding has been installed on the end walls at the factory, fasten close-up strips securely along both edges and seal the edges with a waterproof sealant.

5. **Install trim.** Install any matching trim required to complete the installation.

6. **Seal penetrations.** With a waterproof sealant, seal any penetrations in the siding that may have been caused by temporary shipping protection.

NOTE:

Vinyl siding expands and contracts as much as ¼" over a 12' 6" length. Changes in temperature either heat or cold will buckle siding if installed improperly.

Using nails as fasteners

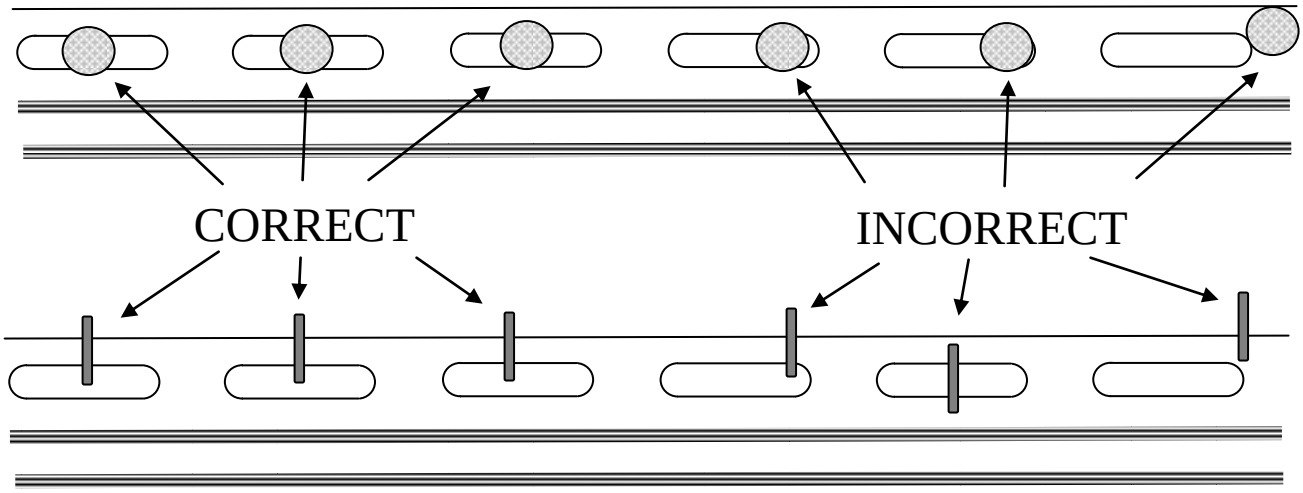

Using staples as fasteners

UTILITIES

Plumbing - general
All plumbing under the home must be installed according to HUD regulations. HUD preempts any state or local jurisdiction from local codes on mobile/manufactured homes. It is the responsibility of the local building officials to assure that the under home plumbing is installed according to the design drawings which are supplied with each home by the manufacturer. The manufacturer of the home is required to supply all plumbing supplies to be used under the home to make connections to the water and drainage systems and includes pipe, glue, fittings, straps and back flow preventers for hose bibs when the hose bibs are provided by the manufacturer. All drain and water line installations are the responsibility of the licensed installer.

Water supply
Licensed installers shall connect potable water connections from the water supply on the home to an existing water meter, water tap or other independent water supply system. An installer cannot drill a well unless licensed to do so.

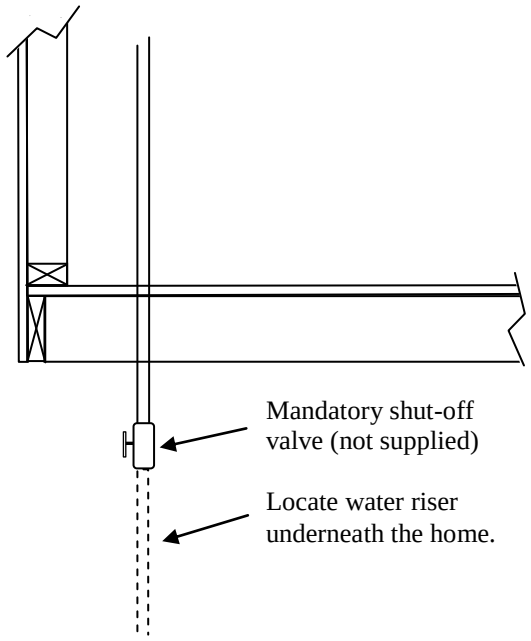

The supply piping will be equipped with a 3/4" threaded inlet connection and will be marked with a label such as "Fresh Water Connection". When local water supply pressure exceeds 80 psi to the home, a pressure reducing valve must be installed. An identified and accessible shutoff valve must be installed between the water supply and the inlet. The shutoff valve must be a full-flow gate or ball valve, or equivalent valve. Many jurisdictions have requirements that back flow prevention devices be installed on all potable water lines connected to the public water supply or a well. When a backflow preventer is required , you should install a single stage unit (NSF listed check valve or equivalent) installed between the shut off valve and the fresh water entrance.

Multi-section homes with plumbing in both sections require water-line crossover connections to join all section of the home. Pay close attention to the installation manuals for proper connections and protection against freezing. If the home has access panels, the installer is to remove the panels make the water connections and replace any insulation and access panels.

The installer should be aware that potable water lines are generally at least 12" deep and a minimum distance of 10 feet from onsite sewage treatment and disposal systems (septic tanks and drain fields).

UTILITIES

Water supply – continued

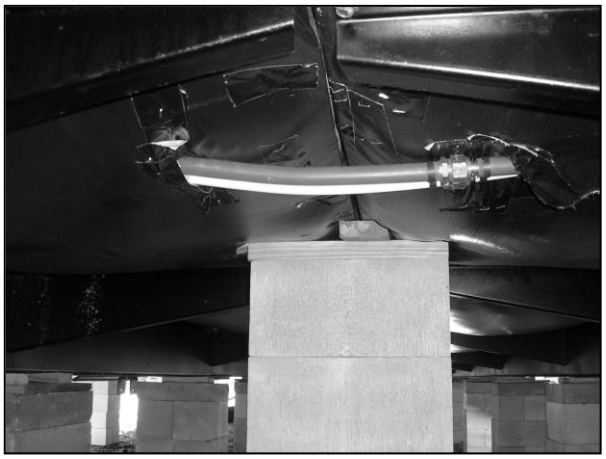

The photograph shows a typical water line cross over. However, by not following the manufacturer's installation manual a violation was created; no freeze protection and no access panel.

In some cases, a manufacturer may put the water supply lines in floor and the installer will have to insert them through predrilled holes in the perimeter rails before making the connection.

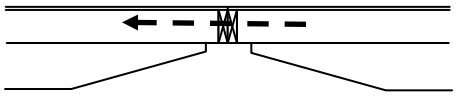

Drainage systems – Drain, Waste, Vent (DWV)

Licensed installers shall connect the drain/sewer drop-outs underneath the home to an existing sewer tap or septic tank. Licensed installers cannot install wells, septic tanks or drain fields unless licensed to do so.

Pipes, fittings, glue and strapping are supplied by the manufacturer. Drain lines must be assembled to the manufacturer's DWV drawing. The DWV fittings must be installed with appropriate primers, cleaners and adhesives. Drain lines must have a uniform slope of not less than ¼" per foot. However, when a clean-out is installed at the upper end of the run, the drain slope may be ⅛" per foot. Drain lines are required to be supported every 4 feet with field installed strap supports. The DWV fittings must be installed with appropriate primers, cleaners and adhesives. An installer must take special care to maintain a constant slope.

In the case of used homes when the original plumbing supplies are not available, the installer must purchase replacement pipes, fittings, glue and strapping.

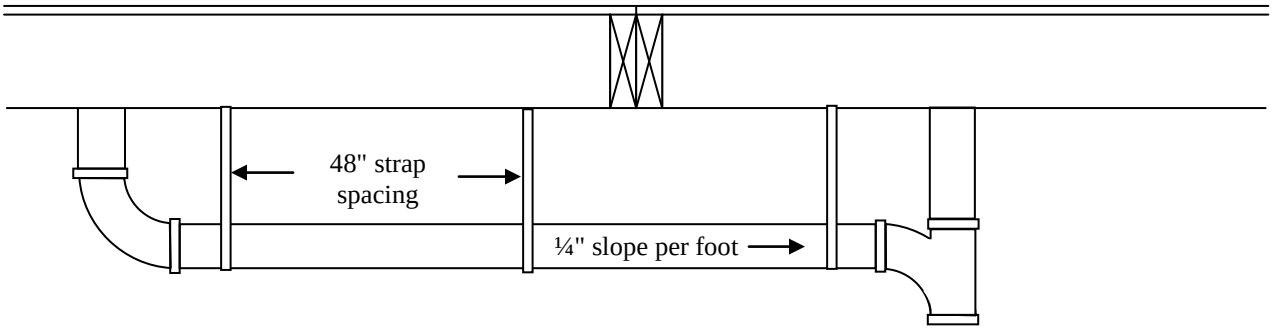

Under floor plumbing drop-outs

UTILITIES

Drainage systems – Drain, Waste, Vent (DWV) continued

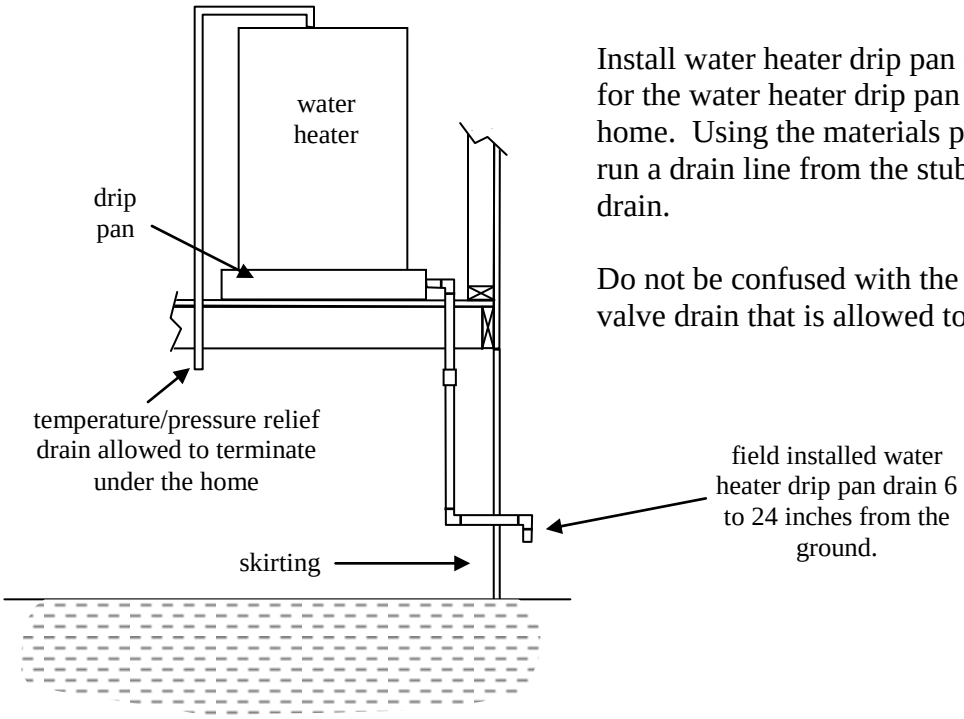

Install water heater drip pan drain. Assure that the drain for the water heater drip pan does not terminate under the home. Using the materials provided and the instructions run a drain line from the stubbed out water heater drip pan drain.

Do not be confused with the temperature/pressure relief valve drain that is allowed to terminate under the home.

Sweep of fittings

Long sweep fittings must be used for horizontal to horizontal connections and vertical to horizontal connections. All fittings must be positioned in the direction of waste flow.

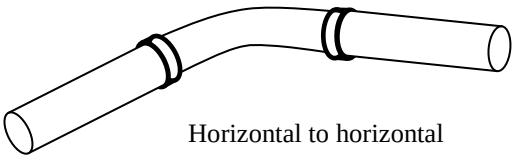

Horizontal to horizontal

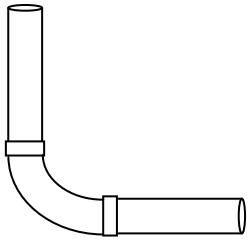

Vertical to horizontal

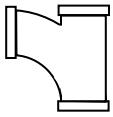

Sanitary tees must always be used in the vertical position.

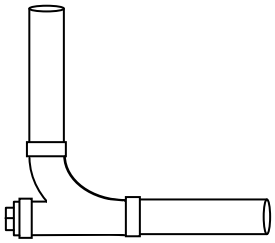

Vertical to horizontal with cleanout

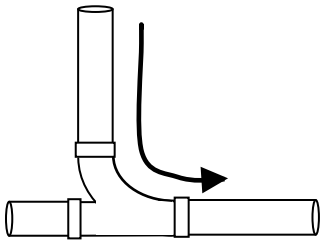

Sweep in the direction of flow

UTILITIES

Drainage systems – Drain, Waste, Vent (DWV) continued

TYPICAL ON SITE DRAINAGE DRAWING
SHOWING ALL CONNECTIONS

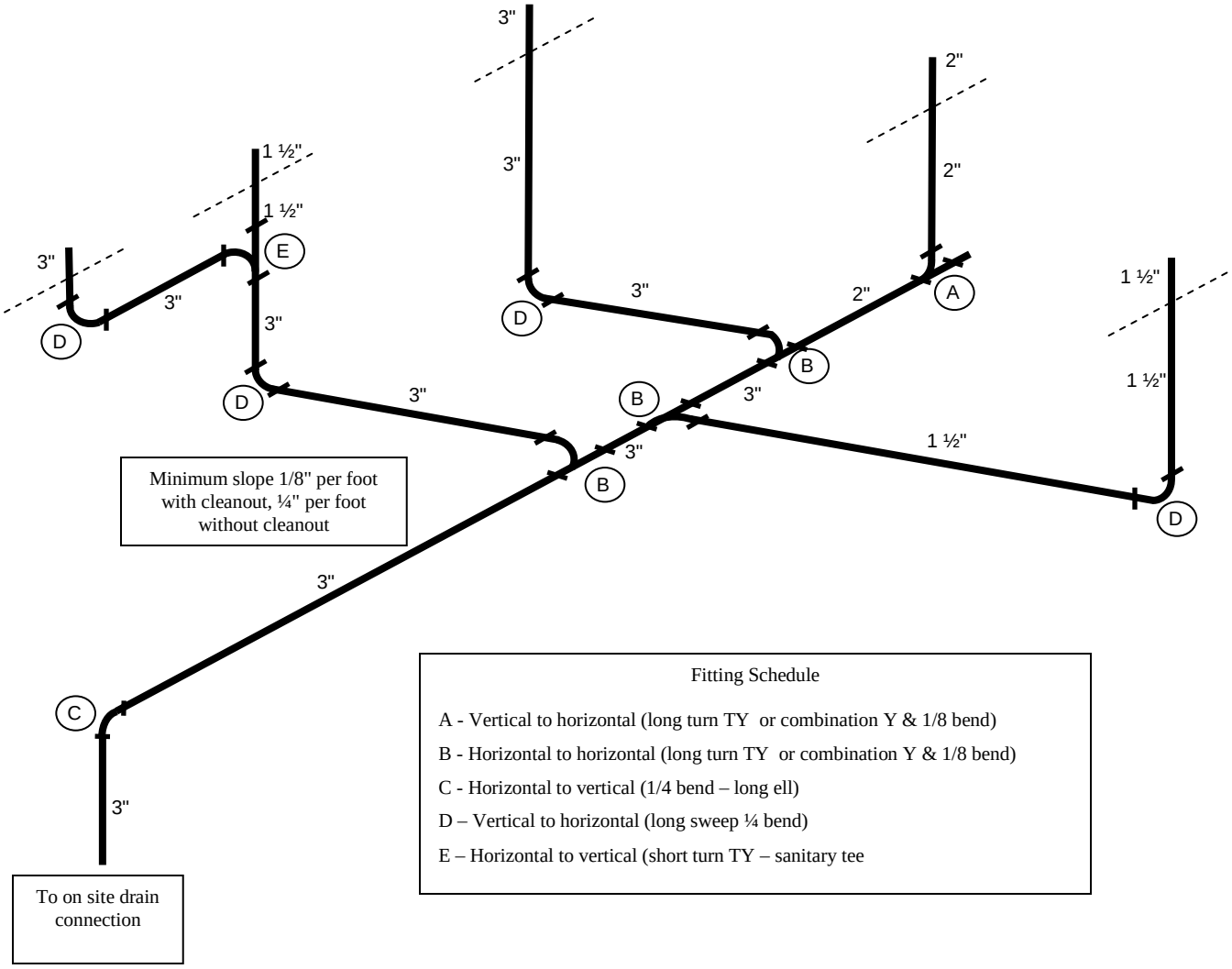

DWV Drawing

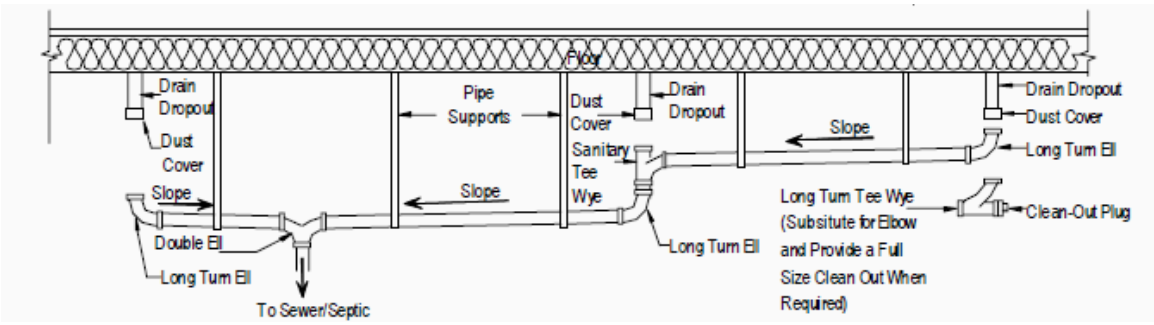

UTILITIES

Electrical

Licensed installers shall connect the electrical conductors between expandable or multi-wide units and attach the bonding wire(s) between the home's sections. Licensed installers cannot install the meter base, run the service entrance cable or connect the service entrance cable to the home's electrical distribution panel box.

All exterior lighting fixtures, ceiling fans must be installed to their listing. Where lighting fixtures are mounted on combustible surfaces such as hardboard, a limited combustible or noncombustible ring must be installed to completely cover the combustible surface exposed between the fixture canopy and the wiring outlet.

When connecting the electrical wires connect the same colored wires together or snap the color coded plug-in type connectors together.

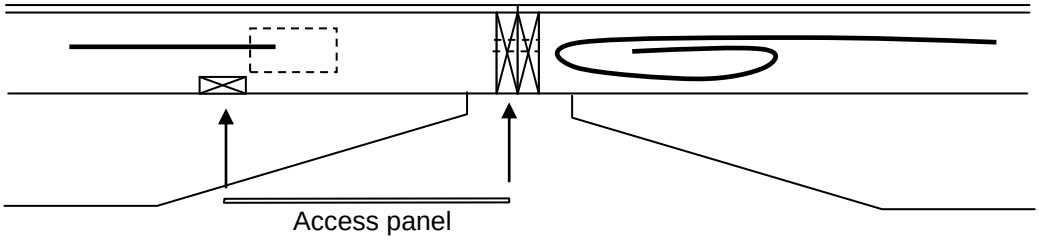

Multi-section electrical crossover through perimeter rail

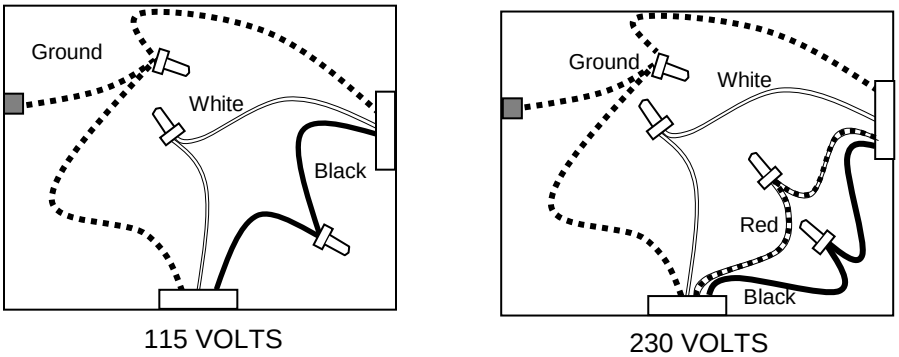

Connecting cross-over wires

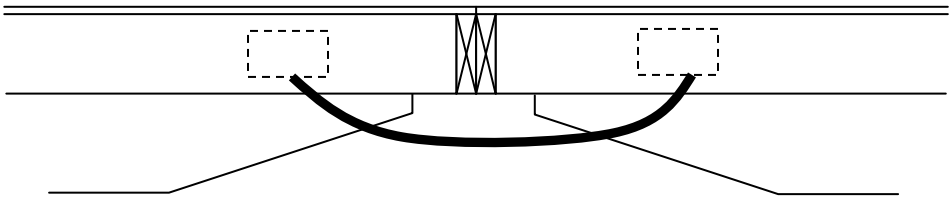

Multi-section electrical crossovers underneath the home

UTILITIES

Electrical

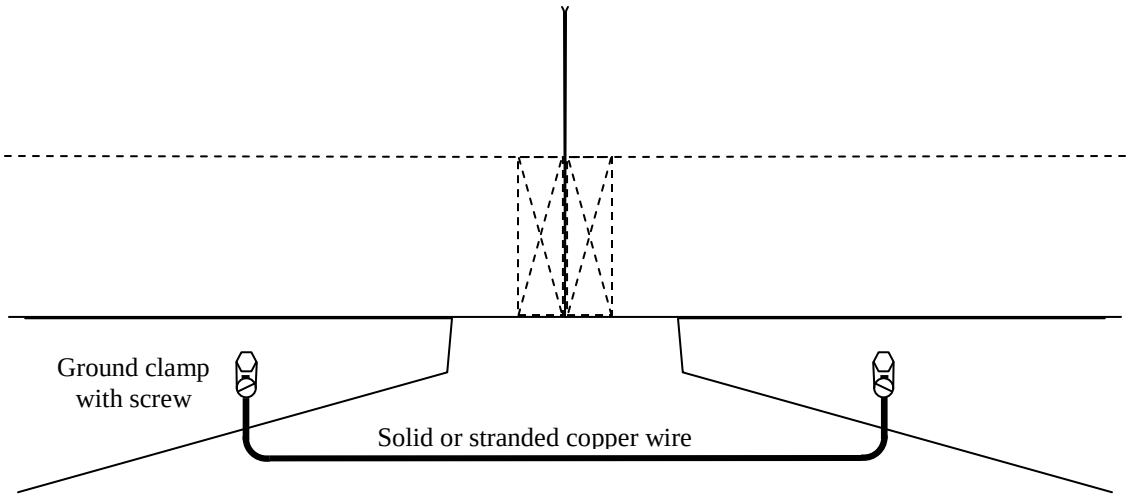

Multi-section Frame Bonding

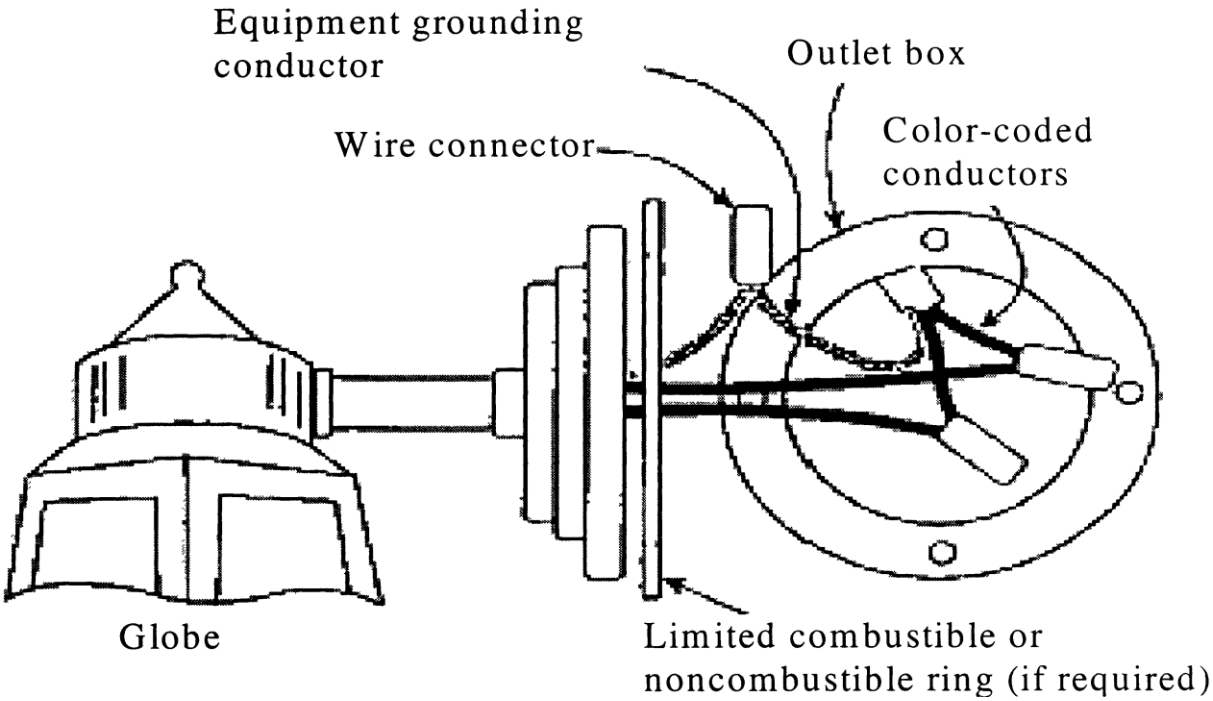

Typical Installation of a Surface-Mounted Exterior Light fixture

UTILITIES

Heating and Air Conditioning (HVAC)

Licensed installers are required to connect the HVAC ducts if the home has some type of cross over duct system, either in the ceiling cavity or underneath the home. Licensed installers cannot install air conditioners/heating units or install the ducts from the appliance to drop outs under the home.

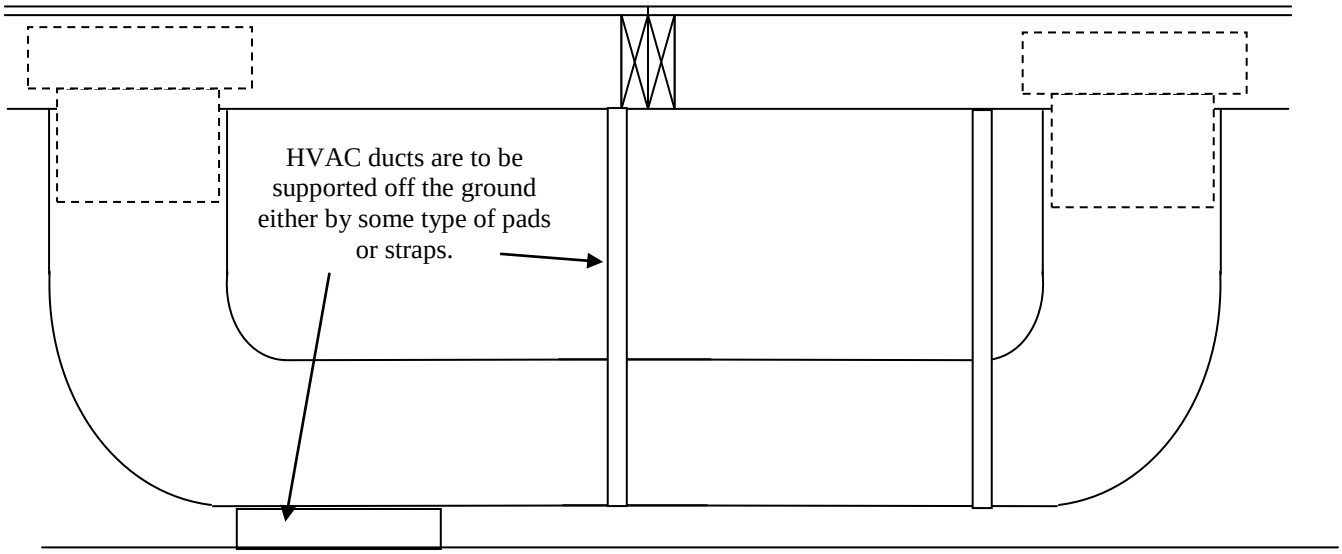

Crossover flexible duct detail

When installing crossover flexible ducts remember:

- Attach the duct to the duct collar (dropout) according to the manufacturer's installation instruction.
- Use long bends to avoid kinks that restrict air flow.
- The ducts must be suspended or supported above the ground by straps or other means that are spaced at a maximum distance not to exceed 4' 0".
- Support straps must be at least ½" wider than the spacing of the metal spirals encasing the duct. The ducts must be installed such that the straps cannot slip between any two spirals and arranged under the floor to prevent compression or kinking in any location.
- The duct has an inner plastic layer, metal spirals and insulation are in the middle and another plastic layer on the outside of the flexible duct.
- Limit length of duct to reduce BTUH loss.
- All ductwork connections, including duct collars, must be sealed to prevent air leakage.
- Metal ducts must be fastened to the collar with a minimum of three galvanized sheet metal screws equally spaced around the collar.
- If metal straps are used, they must be secured with galvanized sheet metal screws.

Dryer ducts

If the home includes a clothes dryer, the components for ventilating the dryer are included with the home. A vent opening has been roughed in either in the wall or floor. Run the dryer vent to the outside through the exterior wall or through the floor to a point beyond the perimeter of the home, using materials approved by the dryer manufacturer's installation instructions.

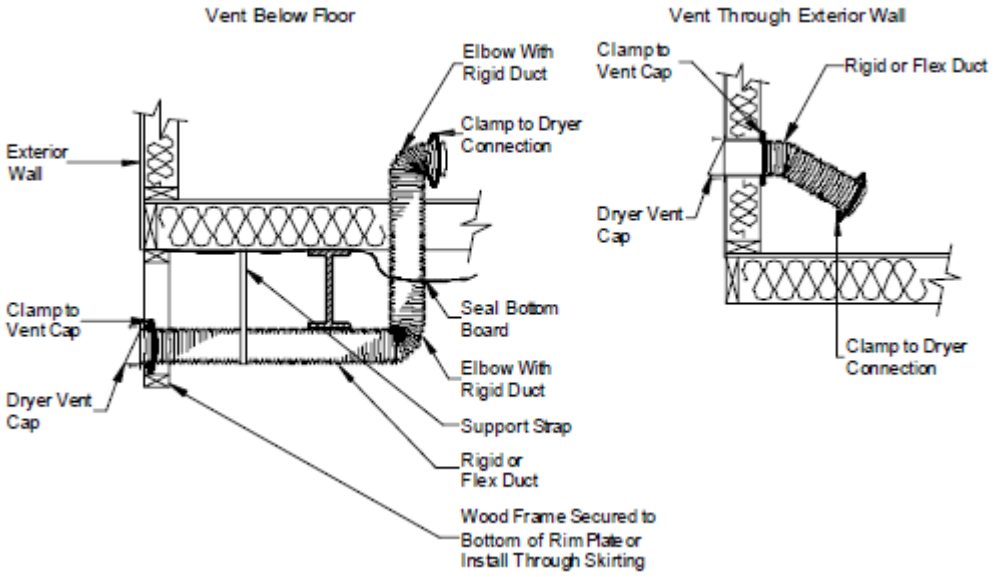

Install ductwork using clamps and support the duct with metal straps connected to the floor joists or chassis at two feet spacings or less. Do not use screws or other fasteners that penetrate into the duct, since the fasteners will cause lint accumulation.

Never cut or damage structural elements such as floor joists or wall studs for the installation of dryer exhaust systems.

Keep ductwork straight and smooth as possible without excess slack.

Fireplaces

Chimney Stack

Home manufacturers leave off the sections of the chimney and vent caps due to height restrictions imposed by the Department of Transportation. Installers are required to install any extra chimney pipe, storm collar and the vent cap.

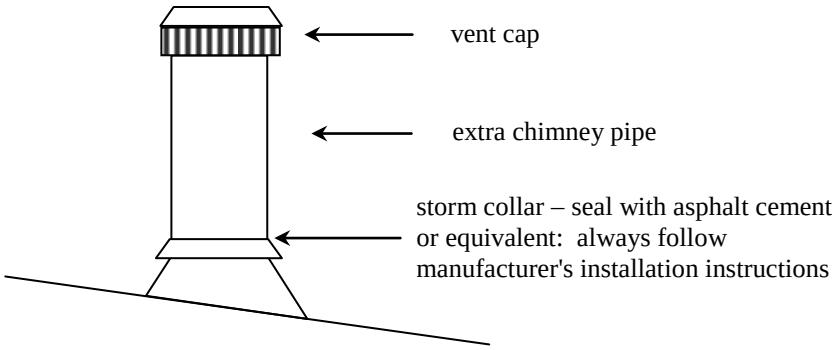

Remove protective materials covering the roof flashing and any foreign material from the installed part of the chimney. An installer is required to install any chimney pipe sections that come with the home. The vent cap must also be installed and the storm collar sealed with asphalt cement.

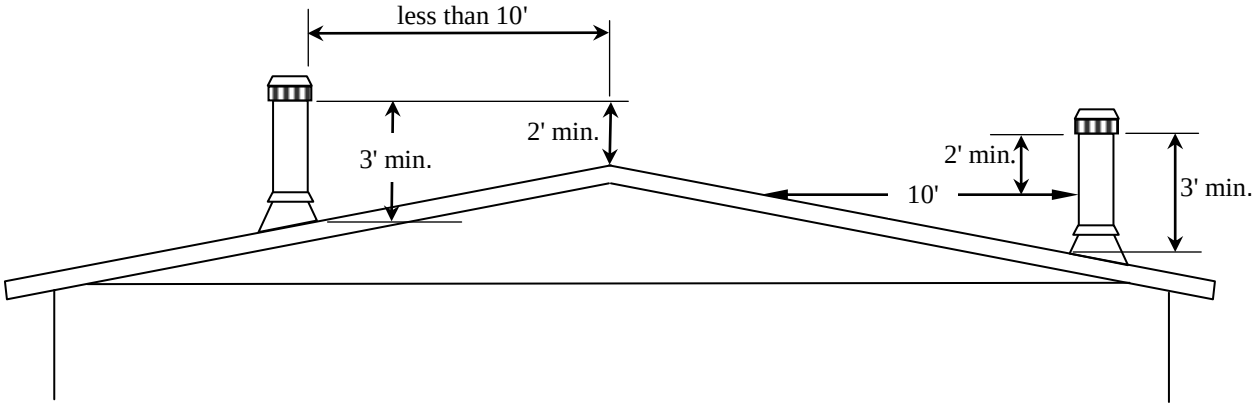

Install chimney pipe. Assemble and seal the chimney per the fireplace or wood stove manufacturer's installation instructions. To assure sufficient draft for proper operation, extend the chimney at least three feet above the highest point where it penetrates the roof and at least two feet higher than any surface within 10 feet of the chimney.

Miscellaneous

Skirting

Used Homes

Rule 15C-1 does not cover skirting or ventilation under homes.

New Homes

Skirting must be of weather-resistant materials or provided with protection against weather deterioration at least equivalent to that provided by a coating of zinc on steel of not less than 0.30 oz per sq ft of surface coated.

Ventilation openings must be covered for their full height and width with a perforated (1/4 inch maximum opening in any dimension) corrosion and weather-resistant covering that is designed to prevent the entry of rodents. In areas subject to freezing, the coverings for the ventilation openings must have an operable damper, permitting them to be in the open or closed position depending on the weather.

To design and install skirting, follow skirting manufacturer's instructions (if provided) and the following:

1. **Configure skirting.** Run the skirting along the perimeter of the home. Do not enclose with skirting areas under recessed entries, porches, or decks (whether constructed as part of the home or added on site) unless skirting is of the fully vented type and installed so as to allow water to freely flow out from under the home.

2. **Fasten skirting.** Recess the skirting under the siding or trim and attach it to the home in a manner that prevents water from being trapped between the siding or trim and the skirting. For wood, aluminum, or fiberglass skirting, install a skirt rail (lumber strip) under the floor inset at least 1-1/2 inches from the edge of the siding for attachment of the skirting.

3. **Install access.** Provide an access opening not less than 18 inches wide and 24 inches high and located so that any utility connections located under the home are accessible.

4. **Extend vents, drains, and inlets.** Run appliance exhaust vents, combustion air inlets, and air conditioner condensation drains through the skirting to the outside and terminate each as instructed in the sections of this manual corresponding to each appliance.

5. **Provide ventilation.** Unless the skirting has integral ventilation openings that meet the following ventilation requirements, install equally sized ventilation openings on at least two opposite sides of the foundation. Size ventilation area to equal at least one square foot for each 150 square feet of under-floor area when no vapor barrier is used. The recommended ventilation for homes with vapor barriers is one square foot for each 300 square feet of under-floor area. Place vents as high above the ground as practical.

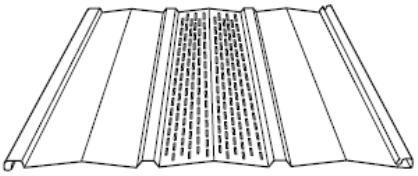

Skirting with ventilation

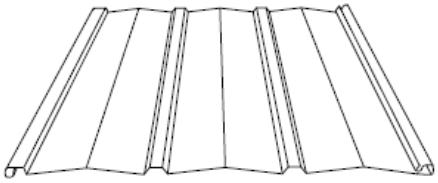

Skirting without ventilation

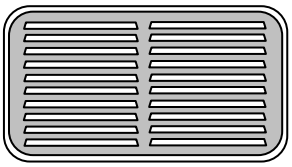

Typical vent

NOTE: If vents are installed, do not use overall dimension of the vent for determining the net free area. If unsure, contact the vent manufacturer.

Inspecting the centerline of the home

The following is a partial list of items that can be missed if the entire centerline of the home is not inspected.

1. Check for any evidence of water getting under the home.
2. The vapor barrier inspected in more detail for overlap and repair of tears & cuts.
3. Centerline foundation pad sizes.
4. Centerline piers locations.
5. Inside I-beam pier construction and placement (page 47).
6. Centerline fastening (lags and/or perpendicular straps).
7. Lag holes patched.
8. Bottom board penetrations can be checked in detail.
9. Gaps in the centerline properly filled.
10. Gasket runs the entire length of the home.
11. Correct anchor installation (page 78).
12. All centerline brackets or hurricane strapping to anchors.
13. Lateral arm attachment to inside I-beam.
14. Lateral are self tapping screw installation.
15. Self tapping screws on the backside of longitudinal stabilizing systems.
16. Bonding wire between sections.
17. Electric wires protected.
18. Water line crossover insulated and protected.
19. Dryer duct terminates to the outside.
20. Water heater drip pan terminates to the outside.
21. HVAC crossover duct connection.
22. HVAC duct work installation.
23. DWV drain line drop outs connected.
24. DWV drain line slope and support.
25. Combustion air inlet (homes with fireplaces).