LEASE 760:0526 – MIAMI MOTORIST SERVICE CENTER

SPACE REQUIREMENT CRITERIA/BUILD-OUT SPECIFICATIONS

ATTACHMENT A

Floor plans are to be a joint effort of Departmental staff and the successful proposer. The successful proposer is to provide architectural services by a licensed architect to prepare renovation plans per the 2003 Edition of NFPA 101 (or most current addition). The final floor plan is subject to Department determination and State Fire Marshal review and approval. The proposer to whom the award is made is responsible for paying a State Fire Marshal'' plan review fee for review of all building plans of leased spaces for the purpose of complying with the State's Uniform Fire Safety Standards prior to commencement of construction of any new or renovated space, Four (4) sets of sealed plans must be submitted for the State Fire Marshal approval. The fee for the plans review is calculated by multiplying the replacement construction cost of the building or portion of the building (based on net square footage) to be leased to the state by the constant .0025 with a minimum fee of $100.00. **To reference illustration of prototype layout, refer to (See Attachment I)**.

1. Offices and Rooms:

Space to be designed to accommodate the approximate size and number of offices/rooms listed below. **The proposer shall provide to scale drawing of the proposed space defining what internal structure if any are fixed. Include with submittal.**

Approximate number/size			**Net SqFt.**
Personnel Areas			
(1)	7	BAR Office not to exceed 133 sq. ft.	931
(2)	3	DDL Office not to exceed 90 sq. ft.	270
(3)	5	DMV Office not to exceed 81 sq. ft.	450
(4)	1	DMV Work Room not to exceed 500 sq. ft. (10 Clerks)	500
(5)	1	DMV Work Room not to exceed 122 sq. ft. (2 Clerks)	122
(6)	36	Workstations not to exceed 60 sq. ft. each (36 Workstations)	2,260
Standard Support Areas			
(7)	3	Reception Area not to exceed 166 sq. Ft.	166
(8)	1	LAN/Telephone Room not to exceed 200 Sq. Ft.	200
(9)	4	Storage Rooms not to exceed a total of 721 sq. ft. (Multiple Rooms)	721
(10)	1	Break Room not to exceed 300 sq ft.	300
(11)	1	Copy Room not to exceed 177 sq. ft. each	177
(12)	1	Conference Room not to exceed 596 sq. ft.	596
Public Use Space			
(14)	1	Service Area Counters & Waiting Rooms not to exceed 5,303 sq. ft.	5,303
(15)	2	Restrooms not to exceed 400 sq. ft.	800
(16)	1	BAR Witness room not to exceed 100 sq. ft.	100
(17)	2	DMV Interview rooms not to exceed 100 sq. ft.	200
(18)	1	DDL Oral Hearing room not to exceed 100 sq. ft.	100
(19)	1	DDL Cash Handling room not to exceed 100 sq. ft.	100
Additional Circulation			907

TOTAL: 14,198 Sq. Ft.

Rest Rooms**:** Must meet the requirements of the Americans with Disabilities Act of 1990 and the requirements of the Accessibility by Handicapped Persons, Section 553.504 (12 – 13), Florida Statutes.

	MEN'S	WOMEN'S	UNISEX
	Public/Staff	Public/Staff	Public/Staff
Water Closets	2/2	4/4	-/-
Urinals	2/2	-/-	-/-
Lavatories W/Mirrors	4/4	4/4	-/-

- Provide Electric hand dryers in public restrooms and hand towel dispensers in employee restrooms.
- All toilets shall be commercial grade power flush.
- Ceramic Tile shall be installed on both floor and walls, in all public restrooms. Wall tile shall be installed from floor to ceiling.
- At least one public and one private restroom must meet the requirements of the accessibility Requirements Manual published by the Department of Community Affairs and the Americans with Disabilities Act of 1990.

Electric Drinking Fountains: Provide a minimum of (2) fountain(s) adjacent to public rest rooms or lobby areas and (1) fountain adjacent to staff rest rooms.

2. Construction:

- Interior Walls and Ceilings: All interior walls to extend from floor to ceiling and to be such suitable construction to permit confidentiality between staff and clients.
- The ceilings will be Commercial Garde 2' x 4' white drop grid panels. The drop grid will be fire rated and have steel grid work.
- Ceiling heights in all rooms are required to be standard height of (8 feet). Ceiling height in reception, waiting, and conference area shall be a standard height of (10 feet) providing energy efficiency is not adversely affected.
- All walls will be 2" X 4" wood or metal studs either of which 16" O. C. All interior walls will be constructed of dry wall.
- Walls that connect with other businesses must extend from floor to roof with fire-retarded drywall.
- All interior doors will be 3-0 solid core or wood. These doors will use commercial grade private locks and 4" brass hinges (three hinges per door). Commercial grade dead bolt locks on all storage and LAN rooms.
- Office and Waiting area to have clear plastic bumper board chair rail 32" high on all walls.
- Driver License supervisor office will have a one-way glass window 2' x 4' located as to view counter and waiting areas from this office. This office will be identified by the agency.
- One (1) ceiling fan shall be located every 300 feet in applicants' waiting and examination areas. Fans to be 52"four or five blades, three speed reversible control, heavy-duty motor craft made, i.e. Hunter or equivalent. Color to be white. Fans are to be installed as not to interfere with the camera backdrops, which will be 6' from the front edge of the examiner counter.

- Note: Depending on size of the proposed space, the ceiling fan requirement may be modified or omitted by the Department (Bureau of Real Estate Services).

- The staff's lounge shall be equipped with a double stainless steel sink with running water. Sink to be installed in appropriate counter with ample space for a microwave oven, coffee maker, etc. Top and base cabinets to include doors and drawers. Cabinets not to exceed eight feet.

3. Window Coverings: All exterior windows shall be tinted with energy saving film and have Venetian or vertical blinds to permit privacy and allow sunlight and energy control. Blind colors to be selected by a Department representative.

4. Painting: All Painted surfaces in the facility shall be freshly painted not more than 60 days prior to the commencement of this lease. Paint color samples will be submitted to a Department representative for approval.

- All interior walls should be painted with commercial grade 25 year Semi-Gloss Interior Latex paint. All doors and frames should be painted with commercial grade 25 year Semi-Gloss Enamel paint.

- All painted surfaces shall be repainted once every three years thereafter or upon the request of a Department representative during the term and any renewals. Touch up painting to be done as requested by a Department representative.

Note: Repainting will be required prior to exercising the renewal options.

5. Floor Coverings: All floor covering shall be newly installed at the commencement of this lease.

Note: Flooring replacement will be required prior to exercising the renewal options.

- All offices, halls adjacent to offices, conference rooms, and examiner areas behind the counter shall be carpeted with a commercial grade carpet to provide acoustics, comfort, and minimum maintenance in cleaning. A Department representative will select all colors.

- All other areas of the office should have commercial grade Ceramic Tile. Replacement of Ceramic Tile is only required if noticeable wear and tear is present. As a first step to correct the problem, the proposer retains the right to have the floors professionally cleaned. In the event cleaning does not meet the Department's standards, new flooring will be required.

Carpet Installation

- Carpet shall be of commercial grade minimal fiber is 100% 3rd generation, continuous filament nylon static control and 26 oz minimum yarn weight or equal. A Department representative shall select the color. Carpet shall be installed wall to wall using continuous lengths and as broad widths as possible to minimize the placement of seams in traffic lanes. Cut edges shall be trued and appropriately treated to form invisible and non-raveling joints where exposed.

- Carpet shall be installed in accordance with manufacturer's recommendations for seaming technique and for proper amount of strength in width and length.

- Metal binder bars or vinyl transitions shall be installed at all areas where floor-covering material changes, or at carpet edges that do not abut a vertical surface.

- Clean carpets free of spots, dirt or soil. Carpet shall have no tears, frayed or pulled tufts. Protect entire surface of carpet until all other work is completed.

Doors shall be shaved or undercut when necessary to clear carpet.

6. <u>Heating, Ventilation, and Air Conditioning</u>: Provide sufficient control units with adequate ductwork, registers and grills sufficient to cool and heat the entire leased area uniformly. Unit(s) shall be equipped with automatic thermostat(s) fitted with tamper proof covers. Temperatures will be maintained to achieve an average zone temperature of 75 degrees Fahrenheit. Control thermostats will be located in areas to achieve proper zone temperature.

- Indoor Air Quality**:** The lessor shall test the indoor air quality if a problem arises. During assessment, samples would minimally be taken for carbon monoxide, carbon dioxide, formaldehyde, and air borne particles, including mold spores and other microbiological particles. The lessor must ensure proper operation and maintenance of the HVAC system, local exhausts and humidity/temperature control system. Initial complaints after occupancy associated with indoor air quality concerns shall be thoroughly investigated and responded to, but not limited to, adjusting air intake, eliminating contaminants, cleaning/sanitizing drip pans, air ducts etc.

- The lessor as a minimum and more often as conditions or manufacturer's recommendations warrant shall change filters for HVAC every 90 days.

7. <u>Lighting:</u>

- The Lessor certifies that the lighting levels within the demised premises are maintained at and do not exceed the following levels: 10 foot-candles in halls and corridors; 30 foot-candles in other public areas; a minimum of 50 foot-candles in office, conference rooms, and other levels as set forth in the State Energy Management Plan, Volume II, Section F.

  Note: Lights shall not be installed directly in front of backdrops, which will be located 6' from the front edge of the examiner counter.

- Interior lighting must be wired to provide the availability of partial lighting to be left on at night for security. All lights directly adjacent to security cameras wired to provide partial lighting.

8. <u>Electrical Requirements:</u>

- Provide a minimum of four duplex electrical outlets 110-volt in each room or office including adequate additional outlets in each clerical/file area. Install one duplex electrical outlet in the waiting area, which will be dedicated to the Department information monitor. The Department will select the location.

- Provide dedicated 20 amp electrical circuits with isolated grounding and double duplex outlets for connection of <u>computer workstations</u>. Each workstation shall not exceed 16 AMP draw.

- All outlets and electrical wiring shall comply with the National Electric Code and any local or state ordinances.

- Provide dedicated 20 amp electrical circuits with isolated grounding and single duplex outlets for the connection of EACH card printer.

- All receptacle outlets are to be Leviton Spec. Grade or equal receptacle outlets and switches will have the following specifications: 20 AMP, 120V, 277VAC, AC. All receptacles will be connected through thin wall conduit using wire size per NEC but not less than Number 12. The special electric will be installed in the testing area. This electric will be connected with the circuits that are for computer systems (see pages 13, 14, and 15 for additional details requiring wiring for computer systems). A 2" open conduit raceway in the wall with outlet.

DHSMV Power Specification for Computer Service:

- Circuit One – (10.0 Amperage draw)

- One 20 AMP, 3 wire dedicated circuit with isolated ground. Requires a single 20 AMP isolated ground receptacle. The receptacle type can be Hubbell #IG5361, Nema Standard 5-20R or equivalent and must be located at the server.

- Circuit Two – (7.1 Amperage Draw)

For the Router:

- One 20 AMP, 3 wire dedicated circuit with isolated ground. Requires a quad 15 AMP isolated ground receptacle. (Two duplex receptacles). The receptacle type can be Hubbell #IG5262 Nema Standard 5-20R or equivalent and must be located next to the server.

- Other electrical needs: Cable Raceways (data and/or voice)

- General (For Telephone Company Use)

- One cable pathway or raceway must be provided from the telephone cable closet, punch down block, or point of demarcation, to the server. One ½" conduit with a standard receptacle box at the server should be sufficient. This will be used to terminate the data server.

General: (For ISA Use)

- A cable pathway or raceway, with a pull string, will be provided from peripheral devices (PC's and printers) to the server. As a rule of thumb, a ½" worth of raceway is needed per device or outlet.

- Example – If you have four videos, two printers, (four total devices), you would need 2" cable pathway or raceway from the counter to the server. The raceway mats consist of conduit, electrical grade PVC, freestanding polls, wire molds, etc.

- Any questions concerning the above requirement should be discussed with The Department of Highway Safety and Motor Vehicles Engineer. Phone No.: 850-617-3309

9. Telecommunications Requirements:

- Minimum of one telephone outlet in each room or office including additional outlets in each open clerical/file area. Communication equipment rooms may have additional requirements.

- All wiring, existing or to be installed, must comply with the National Electrical Code, Section 800-3, paragraph d.

- One (1) open circuit box with pull wire for phone lines in each room.

LAN Room:

- Provide/install 4x8 sheet of ¾ plywood attached to wall. Plywood shall be fixed in a location, which will not interfere with doors. Location will be determined by the agency.
- Provide/install a 6' rack system, which is bolted to the floor. Rack system shall be installed in a location that will not interfere with or be hidden by doors. Location to be determined by the agency.

10. Security Requirements: Security requirements shall include but not be limited to the following:

- Commercial grade deadbolt locks on all exterior doors.

- Locks on all exterior windows.
- All windows in rear or side of building will have protective grill coverings.
- Photosensitive lights at all exterior doors and in all parking areas adjacent to facility.
- View glass in all solid core exterior doors.
- Provide/install concrete Ballard's in front of any exterior portion of the proposed space. This is to prevent a vehicle from damaging the exterior/interior by driving into the building.

11. Signs: All signs must meet ADA specifications.

- Interior Identification**:** Provide interior signs on the wall, not more than fifty-four inches (54") above the floor located immediately to the right or left of the door. Signs shall identify all rest rooms, (handicap symbol on handicap rest rooms) conference rooms, mechanical equipment, etc. All other rooms and/or offices are to be numbered consecutively.

- Exterior Identification**:** Provide/install exterior sign in accordance with local laws and ordinance on the front of the proposed space in individual **18" letters (Sign to become property of the appropriate Division).**

- Provide/install emergency contact information & business hours, which will be provided by the Department, on the exterior of the main entrance door.

12. Fire Protection: Provide fire protection apparatus including fire extinguishers and follow up inspections as required by local fire codes and in compliance with State Fire Marshal reviews and future inspections during the term of the lease. Latest NFPA 101 regulation shall govern.

13. Facility Maintenance and Repairs:

If maintenance or repair items for emergencies or recurring problems do not receive attention within 3 working days after notification is given to the lessor, the lessee will have the right to complete the work, by a contractor of the lessee's choice, the invoice or bill will be sent to the lessor for payment, or the cost will be deducted from the lessor monthly rental payment(s). Non-responsiveness shall be deemed a breach of the lease agreement.

14. Federal State and Local Requirements: The building owner shall comply with the applicable provisions of the Federal Occupational Safety and Health Act, the Federal Communications Act, the State of Florida Safety Rules (Chapter 440.56 Florida Statutes), the National Electric Code, and all other applicable laws, regulations, ordinances, codes, and rules of any governmental entities that have jurisdiction. The lessor agrees to reimburse the Department for all losses, expenses, and damages arising from the violation of any of the above laws, regulations, ordinances, codes and rules.

15. Modular Furniture Specifications:

- Examiner Counters: Provide/install **(36)** prefabricated modular workstations and **(4)** prefabricated modular reception station(s) with laminate surfaces. This shall be installed as per the final floor plan. Workstations shall be manufactured by Maxon or approved equal. All workstations shall include a CPU holder. (**See Attachment J**).

**** (2) Station(s) must meet ADA Specs**

- ADLTS: Provide/install **(17)** testing stations. **(1)** unit should meet ADA requirements. ADLTS stations shall be manufactured by Maxon or approved equal. This shall be installed as per the final floor plan. All ADLTS stations shall include a shelf for CPU storage. ADA stations shall include a CPU holder. (**See Attachment J**).

- Kiosk: Provide/install **(1)** Kiosk station 24" x 24" x 42" H with a shelf inserted 10" down from the top. Kiosk shall be manufactured by Maxon or approved equal. (**See Attachment J**)

- DMV Cubicles: Provide/install (**12**) prefabricated cubicles. Cubicles shall be manufactured by Maxon or approved equal. All Cubicles shall include a CPU holder. The Cubicles shall be installed per the floor plan. **(See Attachment J)**

  NOTE: The State of Florida has several vendors whom provide the above modular furniture on state contract. To obtain information on these vendors please visit the following site:
  http://dms.myflorida.com/business_operations/state_purchasing/vendor_information/state_contracts_agreements_and_price_lists/state_term_contracts/furniture_office_and_files/price_sheets_systems_furniture/price_sheets_computer_stations

16. Miscellaneous Requirements: (Unique Department Requirements)

- Section 403.714, Florida Statutes, mandates that each agency shall have a resource recovery (recycling) program in effect for all space occupied, including private sector space. The state is required by law to collect high-grade office paper and corrugated boxes.

- The Department may not accept office space that has more than two sides of plate glass windows. However, if the prospective lessor is agreeable to renovate the building to remove glass, consideration will be given.

- The adjacent road areas must be appropriate and easily accessible for road tests for driver licenses. (E.g. not congested, easy entrance and exiting of parking lot).

- The lease shall be separately metered for all energy and fuels which may be consumed by Lessee, alone, Lessor will provide Lessee, in a form and manner agreed upon, timely and accurate data on Lessee's monthly consumption or use of electricity, natural gas, LP gas and/or fuel oil, as appropriate.

- This office shall be for high volume usage with the average number of customers served daily being **(1,000)**. The average number of road tests performed daily is **(50)**. Availability of easily accessible roads for driver testing is of critical concern.

- Provide/install **175** waiting area seats. All options will be submitted to a Department representative for approval. Reference the floor plan for seat placement within the facility.

- Provide/install counter at 30" height for printers, faxes, card printers etc. adjacent to the office walls located behind the examiner workstations in accordance with the final floor plan. Cabinetry with doors to be installed below counter.

- Provide/install floor to ceiling shelving on two walls 18" on 2' clearance of each supply/storage room.

- Property being offered must be deemed suitable in location, appearance, and environment for conducting state business. Properties not meeting this requirement will be considered non-responsive.

- Upon completion of the required build out/renovations of the site, the owner or contractor shall provide a Certificate of Occupancy. The Department shall not accept said premises until the space is acceptable and the certificate is provided.

- Identify rear access need to conduct DMV vehicle inspections. This includes furnishing/installation of an exterior canopy for wet weather inspections.

- Provide/Install conference room separator.

- Provide/Install 12'' elevated platform in the examiner area. Refer to the floor plan attached for exact location (Attachment I).

Lease No. 760:0526

APPLICABLE TO DRIVER LICENSES TESTING FACILITIES ONLY

SAMPLE STANDARD CURB

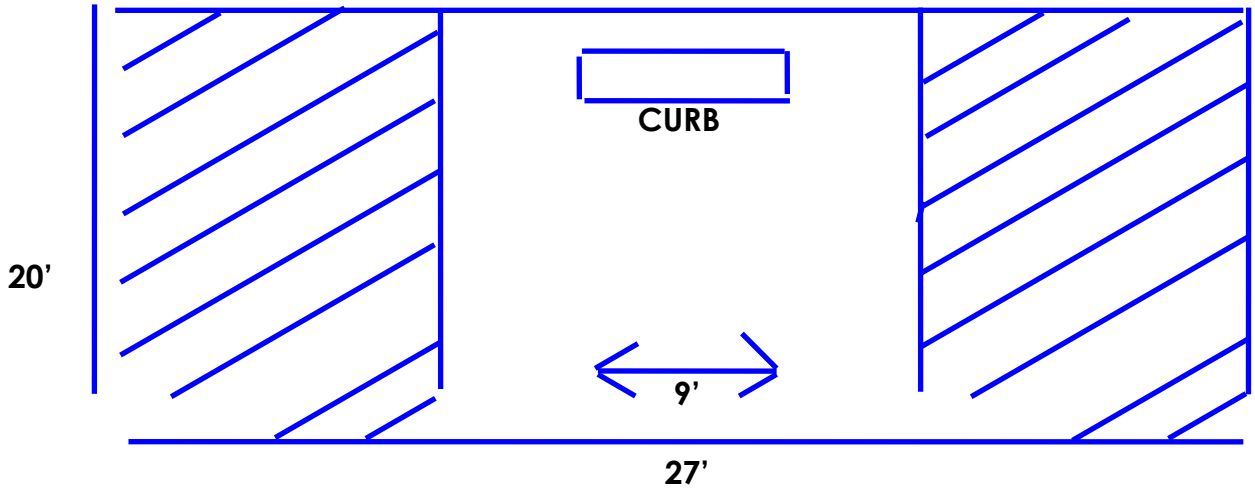

Provide an unobstructed space twenty-seven (27) feet wide and twenty (20) feet long. The space shall be outlined and diagonally marked with yellow traffic paint to prohibit the general public from parking on or blocking the area during the driver license office hours. In the center of the space shall be a space nine (9) feet wide and twenty (20) feet long for the actual parking demonstration. There shall be a concrete curb six (6) inches high and eight (8) feet wide placed two (2) feet out from the front thus making the actual; parking stall 9' x 18'. This 9' x 20' space is also to be outlined with yellow traffic paint but not marked diagonally as the other portion. A diagram of the above requirement is shown above.

ATTACHMENT B

BOUNDARIES

BUILDING MUST BE LOCATED WITHIN THE BOUNDARIES OF:
MIAMI-DADE COUNTY

I-95 to the East
Bird Avenue (40th Street) to the South
Doral Boulevard to the North
State Road 821 to the West

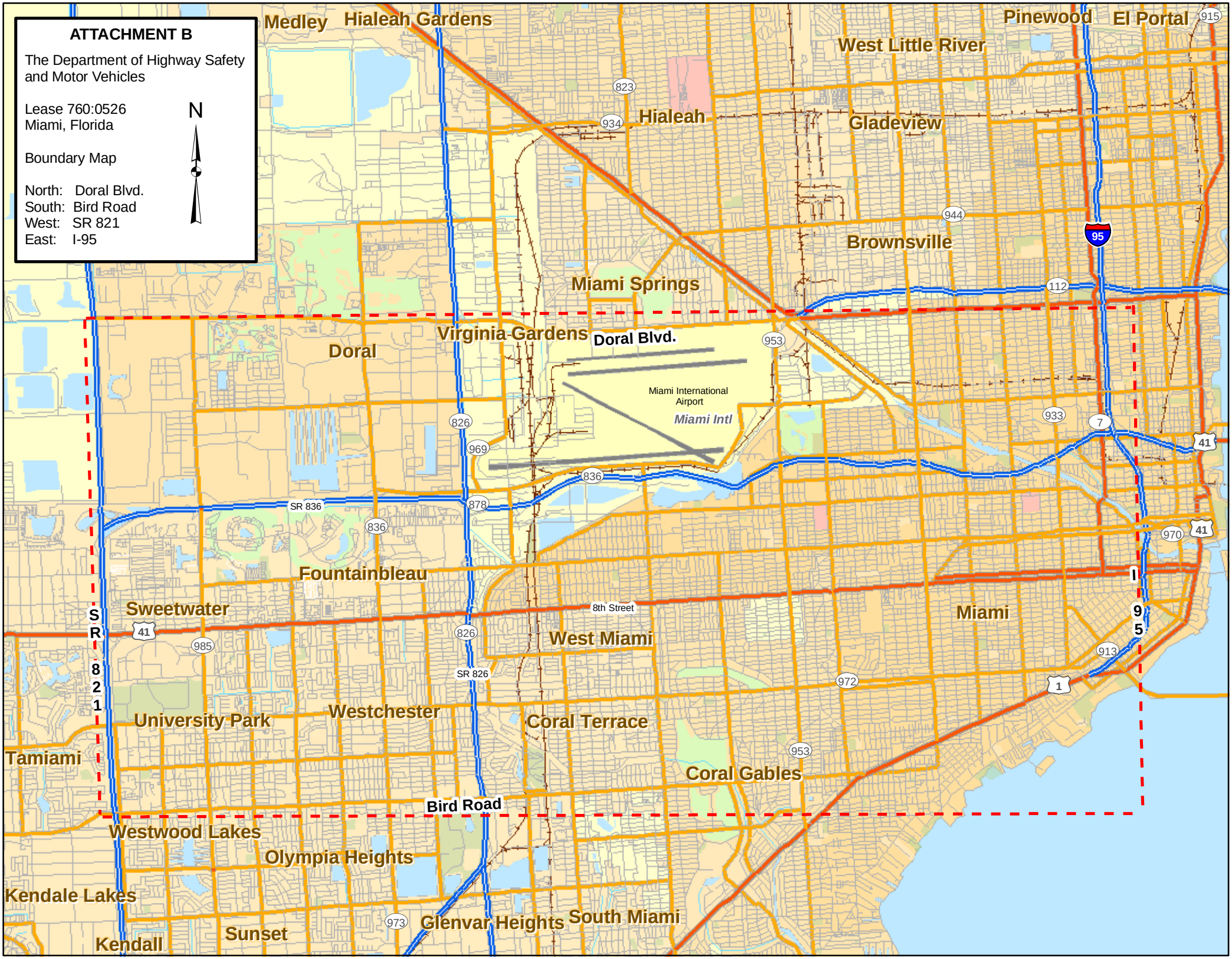
ATTACHMENT B
The Department of Highway Safety and Motor Vehicles
Lease 760:0526
Miami, Florida
Boundary Map
North: Doral Blvd.
South: Bird Road
West: SR 821
East: I-95
N
Medley
Hialeah Gardens
Pinewood
El Portal
West Little River
Hialeah
Gladeview
Brownsville
Miami Springs
Virginia Gardens
Doral Blvd.
Doral
Miami International Airport
Miami Intl
Fountainbleau
Sweetwater
8th Street
Miami
West Miami
SR 836
SR 826
University Park
Westchester
Coral Terrace
Tamiami
Coral Gables
Bird Road
Westwood Lakes
Olympia Heights
Kendale Lakes
Glenvar Heights
South Miami
Sunset
Kendall
SR 821
I 95

ATTACHMENT C

STANDARD STATE OF FLORIDA
LEASE AGREEMENT & ADDENDUMS

Please initial Offeror acknowledgement on all pages of this submittal form:_____

STATE OF FLORIDA
DEPARTMENT OF MANAGEMENT SERVICES
LEASE AGREEMENT

LEASE NO.: 760:0526

THIS LEASE AGREEMENT, entered into this ____day of _____, 20__., between_____party of the first part, hereinafter called the Lessor whose Federal Identification Number (F.E.I.D. or S.S.) is ,and the

State of Florida Department of
Division of
Bureau of

party of the second part, hereinafter called the Lessee,

W I T N E S S E T H:

That the Lessor, for and in consideration of the covenants and agreements hereinafter mentioned to be kept and performed by the Lessee, has demised and leased to the Lessee, for the term and under the conditions hereinafter set out, those certain premises in the

_____
(Name of Building) (City) (Zip Code) (County)

Florida, described as follows:

which shall constitute an aggregate area of _____square feet of net rentable space measured in accordance with the Department of Management Services' Standard Method of Space Measurement, and which comprises approximately _____% of the net square feet in the building at the rate of $ per square foot per year. The Lessor shall also provide _____ parking spaces for the non-exclusive use of the Lessee as part of this lease agreement.

I TERM

TO HAVE AND TO HOLD the above described premises for a term commencing on the ___day of_____,20 to and including the____day of _____, 20_____.

II RENTALS

The Lessor hereby leases to the Lessee and the Lessee hereby leases from the Lessor the above described premises for the term set out in this lease and the Lessee agrees to pay the Lessor the sum of ($) per month for the rental period described in Article I of this lease. The rent for any fractional part of the first month shall be prorated. The rent shall be payable the month following the month of occupancy in accordance with Section 215.422, Florida Statutes. The rentals shall be paid to the Lessor at

_____
(Address) (City) (Zip Code)

III HEATING, AIR CONDITIONING AND JANITORIAL SERVICES

1. a. The Lessor agrees to furnish to the Lessee heating and air conditioning equipment and maintain same in satisfactory operating condition at all times for the leased premises during the term of the lease at the expense of the Lessor.

b. The Lessor agrees to maintain thermostats in the demised premises to achieve an average zone temperature of 75 degrees Fahrenheit during the heating and cooling seasons and certifies that boilers herein have been calibrated to permit the most efficient operation.

2. The Lessor agrees to furnish janitorial services and all necessary janitorial supplies including the provision of recycling trash disposal for the leased premises during the term of the lease at the expense of the Lessor.

3. All services required above shall be provided during the Lessee's normal working hours, which are normally from 7:30 a.m. to 5:30 p.m., Monday through Friday excluding state holidays.

IV LIGHT FIXTURES

1.a. The Lessor agrees to install in the demised premises light fixtures for the use of the Lessee.

*b. The Lessor shall be responsible for replacement of all bulbs, lamps, tubes and starters used in such fixtures for the purpose of furnishing light.

2. The Lessor certifies that the lighting levels within the demised premises are maintained at and do not exceed the following levels: 10 foot-candles in halls and corridors; 30 foot-candles in other public areas; a minimum of 50 foot-candles in office, conference rooms, and other levels as set forth in the State Energy Management Plan, Volume II, Section F.

Please initial Offeror acknowledgement on all pages of this submittal form:_____

V MAINTENANCE AND REPAIRS

1. The Lessor shall provide for interior maintenance and repairs in accordance with generally accepted good practices, including repainting, the replacement of worn or damaged floor covering and repairs or replacement of interior equipment as may be necessary due to normal usage. The Lessee shall, during the term of this lease, keep the interior of the demised premises in as good a state of repair as it is at the time of the commencement of this lease, reasonable wear and tear and unavoidable casualties excepted.

2. The Lessor shall maintain and keep in repair the exterior of the demised premises during the term of this lease and shall be responsible for the replacement of all windows broken or damaged in the demised premises, except such breakage or damage caused to the exterior of the demised premises by the Lessee, its officers, agents or employees.

3. The Lessor shall maintain the interior and exterior of the demised premises including grounds and parking area so as to conform to all applicable health and safety laws, ordinances and codes which are presently in effect and which may subsequently be enacted during the term of this lease and any renewal periods.

4. The Lessor agrees to furnish pest control services for the leased premises during the term of the lease at the expense of the Lessor.

***VI UTILITIES**

That the Lessee will promptly pay all gas, water, sewer, solid waste, power and electric light rates or charges which may become payable during the term of this lease for the gas, water, sewer and electricity used and disposal of solid waste generated by the Lessee on the premises; and if the lease is for 5,000 square feet or greater, separately metered for all energy and fuels which may be consumed by Lessee, alone, Lessor will provide Lessee, in a form and manner agreed upon, timely and accurate data on Lessee's monthly consumption or use of electricity, natural gas, LP gas and/or fuel oil, as appropriate, pursuant to Section 255.257, Florida Statutes.

* These are the only Articles in which the word "Lessor" can be changed to "Lessee" by the Lessee without authorization from the Division of Facilities Management. (Rule 60H-1.003 Florida Administrative Code)

VII ACCESSIBILITY STANDARDS AND ALTERATIONS

1. The Lessor agrees that the demised premises now conform, or that, prior to Lessee's occupancy, said premises shall, at Lessor's expense, be brought into conformance with the requirements of the Florida Americans With Disabilities Accessibility Implementation Act, Section 553.501 - 553.513, Florida Statutes, and the current Florida Disability Code for Building Construction, providing requirements for persons with disabilities and with the requirement of Public Law 101-336, enacted July 26, 1990, effective January 26, 1992, Section 28 CFR Part 35 and Appendix to Section 36 CFR Part 1191, Known as the "Americans with Disabilities Act of 1990."

2. That the Lessee shall have the right to make any alterations in and to the demised premises during the term of this lease upon first having obtained the written consent thereto of the Lessor. The Lessor shall not capriciously withhold the consent to any such alterations.

VIII INJURY OR DAMAGE TO PROPERTY ON PREMISES

All property of any kind that may be on the premises during the continuance of this lease shall be at the sole risk of the Lessee, and except for any negligence of the Lessor, the Lessor shall not be liable to the Lessee for loss or damage to the property.

IX FIRE AND OTHER HAZARDS

1. In the event that the demised premises, or the major part thereof, are destroyed by fire, lightning, storm or other casualty, the Lessor at its option may forthwith repair the damage to such demised premises at its own cost and expense. The rental thereon shall cease until the completion of such repairs and the Lessor will immediately refund the pro rata part of any rentals paid in advance by the Lessee prior to such destruction; should the premises be only partly destroyed, so that the major part thereof is usable by the Lessee, then the rental shall abate to the extent that the injured or damaged part bears to the whole of such premises and such injury or damage shall be restored by the Lessor as speedily as is practicable and upon the completion of such repairs, the full rental shall commence and the lease shall then continue the balance of the term.

2. The Lessor shall provide for fire protection during the term of this lease in accordance with the fire safety standards of the State Fire Marshal. The Lessor shall be responsible for maintenance and repair of all fire protection equipment necessary to conform to the requirements of the State Fire Marshal. The Lessor agrees that the demised premises shall be available for inspection by the State Fire Marshal, prior to occupancy by the Lessee, and at any reasonable time thereafter.

3. The Lessor certifies that no asbestos was used in the construction of the demised premises or that if asbestos was used, actions have been completed to correct the hazards caused by the use of asbestos.

4. The Lessor certifies that if any radon is present, it is at a measurement level less than 4 PCI/L.

X EXPIRATION OF TERM

At the expiration of the term, the Lessee will peaceably yield up to the Lessor the demised premises in good and tenantable repair. It is understood and agreed between the parties that the Lessee shall have the right to remove from the premises all personal property of the Lessee and all fixtures, machinery, equipment, appurtenances and appliances placed or installed on the premises by it, provided the Lessee restores the premises to as good a state of repair as they were prior to the removal.

XI SUBLETTING AND ASSIGNMENT

The Lessee upon obtaining written consent of the Lessor, which written consent shall not capriciously be withheld, shall have the right to sublet all or any part of the demised premises or to assign all or any part of the demised premises.

XII NOT CONSENT TO SUE

The provisions, terms or conditions of this lease shall not be construed as a consent of the State of Florida to be sued because of said lease hold.

XIII WAIVER OF DEFAULTS

The waiver by the Lessee of any breach of this lease by the Lessor shall not be construed as a waiver of any subsequent breach of any duty or covenant imposed by this lease.

Please initial Offeror acknowledgement on all pages of this submittal form:_____

XIV RIGHT OF LESSOR TO INSPECT

The Lessor, at all reasonable times, may enter into and upon the demised premises for the purpose of viewing the same and for the purpose of making any such repairs as they are required to make under the terms of this lease.

XV BREACH OF COVENANT

These presents are upon this condition, that, except as provided in this lease, if the Lessee shall neglect or fail to perform or observe any covenant herein contained, which on the Lessee's part is to be performed, and such default shall continue for a period of thirty (30) days after receipt of written notice thereof from the Lessor to the Lessee, then the Lessor lawfully may, immediately, or at any time thereafter, and without further notice or demand, enter into and upon the demised premises, or any part thereof, and repossess the same as of their former estate and expel the Lessee and remove its effects forcefully, if necessary, without being taken or deemed to be guilty of any manner of trespass and thereupon this demise shall terminate but without prejudice to any remedy which might otherwise be used by the Lessor for arrears of rent or for any breach of the Lessee's covenants herein contained.

XVI ACKNOWLEDGMENT OF ASSIGNMENT

That the Lessee upon the request of the Lessor shall execute such acknowledgment or acknowledgments, or any assignment, or assignments, of rentals and profits made by the Lessor to any third person, firm or corporation, provided that the Lessor will not make such request unless required to do so by the Mortgagee under a mortgage, or mortgages executed by the Lessor.

XVII TAXES AND INSURANCE

1. Lessor shall pay all real estate taxes and fire insurance premiums on the demised premises. Lessor shall not be liable to carry fire insurance on the person or property of the Lessee or any other person or property which may now or hereafter be placed in the demised premises.

XVIII AVAILABILITY OF FUNDS

The State of Florida's performance and obligation to pay under this contract is contingent upon an annual appropriation by the Legislature. F.S. 255.2502.

XIX USE OF PREMISES

The Lessee will not make or suffer any unlawful, improper or offensive use of the premises or any use or occupancy thereof contrary to the laws of the State of Florida or to such Ordinances of the City and/or County in which the demised premises are located, now or hereinafter made, as may be applicable to the Lessee.

XX RENEWAL

The Lessee is hereby granted the option to renew this lease for an additional _____years(s) upon the same terms and conditions or as specified on attached addendum. If the Lessee desires to renew this lease under the provisions of this Article, it shall give the Lessor written notice thereof not more than six months nor less than three months prior to the expiration of the term provided in Article I of this Lease or any applicable renewal period.

XXI RIGHT TO TERMINATE

The Lessee shall have the right to terminate, without penalty, this lease in the event a State owned building becomes available to the Lessee for occupancy upon giving six (6) months advance written notice to the Lessor by Certified Mail, Return Receipt Requested.

XXII NOTICES AND INVOICES

All notices required to be served upon the Lessor shall be served by Registered or Certified Mail, Return Receipt Requested, at

_____

(Street) (City) (Zip Code)

and all notices required to be served upon the Lessee shall be served by Registered or Certified Mail, Return Receipt Requested, at the address of the Lessee at

_____

(Street) (City) (Zip Code)

Invoices, in triplicate, shall be submitted monthly to:_____

XXIII DEFINITION OF TERMS

(a) The terms "lease," "lease agreement," or "agreement" shall be inclusive of each other and shall also include any renewals, extensions or modifications of this lease.

(b) The terms "Lessor" and "Lessee" shall include the successors and assigns for the parties hereto.

(c) The singular shall include the plural and the plural shall include the singular whenever the context so requires or permits.

XXIV ADDITIONAL TERMS

(Check One)

_____All additional covenants or conditions appear on attached Addendum(s)_____.

_____No additional covenants or conditions form a part of this lease.

Please initial Offeror acknowledgement on all pages of this submittal form:_____

Lease No. 760:0526

IN WITNESS WHEREOF, the parties hereto have hereunto executed this instrument for the purpose herein expressed, the day and year above written.

ANY LEASE AGREEMENT SHALL NOT BECOME LEGALLY EFFECTIVE UNTIL APPROVED/ACCEPTED BY THE DEPARTMENT OF MANAGEMENT SERVICES.

ORIGINAL SIGNATURES REQUESTED ON ALL COPIES

Signed, sealed and delivered in the presence of: _____ Witness Signature _____ Print or Type Name of Witness _____ Witness Signature _____ Print or Type Name of Witness AS TO LESSOR	LESSOR, IF INDIVIDUAL (S): _____(SEAL) _____ Print or Type Name _____(SEAL) _____ Print or Type Name
Signed, sealed and delivered in the presence of: _____ Witness Signature _____ Print or Type Name of Witness _____ Witness Signature _____ Print or Type Name of Witness As to President, General Partner, Trustee	Name of Corporation, Partnership, Trust, etc.: By: _____(SEAL) Its President, General Partnership, Trustee ATTEST: _____(SEAL) Its Secretary
Signed, sealed and delivered in the presence of: _____ Witness Signature _____ Print or Type Name of Witness _____ Witness Signature _____ Print or Type Name of Witness AS TO LESSEE	LESSEE: STATE OF FLORIDA DEPARTMENT OF By:_____ _____ Print or Type Name _____ Print or Type Title

APPROVED AS TO CONDITIONS AND NEED THEREFORE DEPARTMENT OF MANAGEMENT SERVICES _____ Chief, Real Property Administrator, Division of Real Estate Development and Management _____, Director Division of Real Estate Development and Management APPROVAL DATE: _____	APPROVED AS TO FORM AND LEGALITY, SUBJECT ONLY TO FULL AND PROPER EXECUTION BY THE PARTIES GENERAL COUNSEL DEPARTMENT OF MANAGEMENT SERVICES By: _____ _____ Print or Type Name APPROVAL DATE: _____	APPROVED AS TO FORM AND LEGALITY, SUBJECT ONLY TO FULL AND PROPER EXECUTION BY THE PARTIES GENERAL COUNSEL DEPARTMENT OF By: _____ _____ Print or Type Name APPROVAL DATE: _____

FM 4065 (R05/04)

Please initial Offeror acknowledgement on all pages of this submittal form:_____

SAMPLE MONTHLY RENTAL RATE SCHEDULE

Lease No._____

Rental Rate Schedule

Effective 05/01/93

TERM	AMOUNT PER SQ.FT.	MONTHLY RENTAL
First Year 05/01/93 - 08/31/93	$13.50	$21,682.13 Twenty-one thousand six Hundred eighty-two dollars and thirteen cents
Second Year 09/01/93 - 08/31/94	$14.18	$22,774.26 Twenty-two thousand seven Hundred seventy-four dollars and twenty-six cents
Third Year 09/01/94 - 08/31/95	$14.89	$23,914.58 Twenty-three thousand nine Hundred fourteen dollars and fifty-eight cents
Fourth Year 09/01/95 - 08/31/96	$15.63	$25,103.08 Twenty-five thousand one Hundred three dollars and eight cents
Fifth Year 09/01/96 - 08/31/97	$16.41	$26,355.83 Twenty-six thousand three hundred fifty-five dollars and eighty-three cents

FM 4065 (R05/04)

Please initial Offeror acknowledgement on all pages of this submittal form:_____

STATE OF FLORIDA

DEPARTMENT OF MANAGEMENT SERVICES

CERTIFICATION REGARDING DEBARMENT, SUSPENSION, INELIGIBILITY AND VOLUNTARY EXCLUSION CONTRACTS/SUBCONTRACTS

REQUIRED ADDENDUM I

LEASE NUMBER: 760:0526

This certification is required by the regulations implementing Executive Order 12549, Debarment and Suspension, signed February 18, 1996. The guidelines were published in May 29, 1987 Federal Register (52 Fed., Reg., pages 20360-20369).

(1) The prospective lessor certifies, by signing this certification, that neither he nor his principals is presently debarred, suspended, proposed for debarment, declared ineligible or voluntarily excluded form participation in contracting with the department by any federal department or agency.

(2) Where the prospective lessor is unable to certify to any of the statements in this certification, such prospective lessor shall attach an explanation to this certification.

_____
Lessor's Signature

_____
Date

_____
Name and title of Authorized Signee

_____
Name of Corporation, Partnership, Trust, Etc.

(SEAL)

Please initial Offeror acknowledgement on all pages of this submittal form:_____

STATE OF FLORIDA

DEPARTMENT OF MANAGEMENT SERVICES

RENTAL COMMENCEMENT

ADDENDUM II

LEASE NUMBER: _____

NOTHWITHSTANDING the provisions of Articles **"I TERM"** and **"II RENTALS"** of this lease, term shall not commence until date of completion of the renovations of the demised premises in accordance with the Request for Proposal and, thereby, made ready for occupancy by Lessee. At the time of occupancy the rent for any fractional part of the first month of occupancy shall be prorated.

As a condition precedent to Lessee's obligation to occupy and pay rent, the leased premises shall be renovated and completed in accordance with the Request to Proposal issued for the above referenced lease.

Lessor:

Lessee: Florida Department of Highway Safety & Motor Vehicles

_____ _____

(SEAL)

FM 4054A (R05/04)

FM 4065 (R05/04)

Please initial Offeror acknowledgement on all pages of this submittal form:_____

STATE OF FLORIDA

DEPARTMENT OF MANAGEMENT SERVICES

ADDENDUM FOR ASSESSING LIQUIDATED DAMAGES

ADDENDUM NUMBER: III

LEASE NUMBER: _____

As a condition precedent to lessee's obligation to occupy and pay rent, the leased premises shall be renovated and completed in accordance with the Request for Proposal issued for the above referenced lease.

Should Lessor fail to complete renovations within the time frame specified in the Request for Proposal, liquidated damages in the amount of $_____/per day shall be assessed until specified renovations are completed. This provision for liquidated damages shall in no way affect Lessee's right to terminate the Lease for failure to have the renovations completed by the commencement date of the Lease. The Lessee's exercise of the right to terminate the lease shall not release the Lessor from his obligation to pay said liquidated damages in the amount stated above. Should renovations not be completed within time frame specified in the Request for Proposal due to acts of God affecting the Premises or due to fault of Lessee, liquidated damages shall not apply to Lessor.

Lessor: Lessee: Florida Department of Highway Safety & Motor Vehicles

_____ _____

(SEAL)

FM 4054B (R05/04)

FM 4065 (R05/04)

Please initial Offeror acknowledgement on all pages of this submittal form:_____

STATE OF FLORIDA

DEPARTMENT OF MANAGEMENT SERVICES

JANITORIAL SERVICES

ADDENDUM IV

LEASE NUMBER: 760:0526

The lessor agrees to furnish janitorial and cleaning services as part of this lease agreement. This includes furnishing all cleaning/maintenance equipment and cleaning supplies as required, including but not limited to, drinking cups at water fountains, bathroom tissues, paper towels, trash receptacle liners, hand soap (preferably liquid) and doormats at entrances to the facility. All supplies are to be of good quality acceptable in the janitorial profession and of satisfactory quality suitable to the needs of personnel.

Cleaning of the facility shall be accomplished in accord with the following schedule:

FLOORS	
DAILY:	Carpeted Areas – Vacuum Non-carpeted Areas – Dust mop Remove gum and other materials. Spot damp mop and to remove stains or spots.
WEEKLY:	Non-Carpeted Areas – Damp mop and spray buff.
SEMI-ANNUALLY:	Machine clean carpets in hallways. Other areas to be cleaned if their condition so dictates.
	Strip, reseal and wax all normally waxed floors.
ANNUALLY:	Machine clean all carpets throughout the facility.
WALLS, CEILINGS, INTERIOR DOORS, LEDGES, ETC.	
WEEKLY:	Spot Clean
	Clean light switch plates and surrounding wall areas.
	Dust windowsills, ledges, fixtures, etc.
MONTHLY:	Dust or vacuum HVAC registers.
ANNUALLY:	Clean all light fixture diffuses and dust light bulbs.
WINDOWS AND GLASS	
DAILY:	Spot clean entrances and vicinity glass both in and outside.
	Spot clean directory and internal glass or windows.
SEMI-ANNUALLY:	Clean inside of external windows.
WATER FOUNTAINS	
DAILY:	Clean and sanitize.
	Replenish supply of disposable cups (if applicable).

FURNISHINGS	
AS NEEDED, BUT AT LEAST WEEKLY:	Dust tables, chairs, desks, credenzas, file cabinets, bookcases, etc. Do not disturb any papers lying on desks or cabinets Dust and clean all ornamental wall decorations, picture, charts, chalkboards, etc. Dust draperies, venetian blinds, or curtains.
SEMI-ANNUALLY:	Vacuum all drapes, venetian blinds, or curtains.
TRASH AND REFUSE	
DAILY:	Empty and clean all trash receptacles. Receptacle liners are to be used. Change as necessary. Remove all collected trash to external dumpsters or trash containers. In conference rooms, reception areas, etc., remove accumulated trash, i.e. paper cups, soda cans, etc.
CIGARETTE URNS AND ASHTRAYS	
DAILY:	Empty and clean all cigarette urns. Empty and damp wipe all ashtrays.
ELEVATORS – (If Applicable)	
DAILY:	If carpeted, vacuum. If not carpeted, dust mop, remove gum and other materials, spot damp mop to remove stains or spots. Clean hardware and control panels.
WEEKLY:	Vacuum door tracks. Damp mop floors and spray buff if not carpeted.
STAIRWELLS (If Applicable)	
DAILY:	Remove accumulated trash. Spot sweep as required.
WEEKLY:	Sweep. Dust mop to remove stains. Dust handrails, ledges, etc. Spot clean walls and doors.
RESTROOMS	
DAILY:	Maintain in a clean and sanitary condition: floors, walls, doors, stalls, partitions, shelves, sinks, commodes, urinals, bath facilities, soap and towel dispensers Clean and polish mirrors. Empty and sanitize trash and sanitary napkin receptacles. Replenish supplies of tissue, towels, and soap. Check and replace, as necessary, deodorizer bars/room air freshener units.
MONTHLY:	Clean ceramic tile surfaces with a strong cleaner or bleach so that tile and grout have a uniform color.
LOUNGE AND KITCHEN AREAS (If Applicable)	
DAILY:	Clean and sanitize sinks and counter areas.
EXTERIOR	
DAILY:	Sweep outside area immediately adjacent to building entrances. Keep parking lot and surrounding grass areas free of trash.
WEEKLY:	Sweep all exterior access areas, i.e. sidewalks, porches, verandas, etc.

MAINTENANCE SERVICES

In reference to Articles III and V of the lease agreement:

1. Filters for HVAC shall be changed every 90 days at a minimum and more often as conditions warrant.

2. All painted surfaces in the facility shall be freshly painted at the commencement of this lease, if needed, and at least once every three years thereafter during the lease term and any renewals thereof. Touch up painting to be done as needed.

3. Perform such other services as are necessary to keep the facility clean and in a sanitary condition.

In providing any or all of the before mentioned services:

1. Janitorial staff are to only use necessary lighting in the areas in which they are actually working and turn off unnecessary lighting. Air conditioning equipment is not to be turned on for the exclusive use of the janitorial staff.

2. Only actual employees of the janitorial contractor are to be admitted to the premises.

3. During after hours cleaning, all outside doors are to be locked and janitorial staff are not to provide access into the facility to anyone.

4. Janitorial staff are to check exterior doors and windows to ensure the facility is secure at the time of leaving the facility.

Lessee: Department of Highway Safety
And Motor Vehicles

Lessor:

_____
Lessee Signature

_____
Lessor Signature

(SEAL)

STATE OF FLORIDA
DEPARTMENT OF MANAGEMENT SERVICES

FAILURE TO COMPLY
ADDENDUM NUMBER V

LEASE NUMBER: 760:0526

In the event that Lessor fails to comply with any term or provision of this Lease after written notice, Lessee reserves the option to 1) setoff and deduct from the rental amount due Lessor under this lease such sums as Lessee determines are required to remedy the default of Lessor; 2) do whatever Lessor is obligated to do under the terms of this Lease; and Lessor agrees to reimburse Lessee on demand for any reasonable expenses which Lessee may incur in thus effecting compliance with Lessor's obligation under this Lease; and Lessee hereby covenants and agrees to use its best efforts to mitigate damages caused thereby; 3) terminate this Lease and vacate the premises, but without prejudice to any remedy which might otherwise be used by the Lessee for any breach of the Lessor's covenants contained herein; 4) bring suit for damages against Lessor for any expense (including reasonable attorney's fees) Lessee may incur by reason of a delay in the Commencement Date of this Lease, except for any such delay caused solely by any delay, default or omission of Lessee, Acts of God affecting Premises, or incidents outside of the Lessor's control affecting Premises.

Lessee is required to give Lessor written notice setting forth in reasonable detail the nature and extent of such failure and Lessor will be given thirty (30) days to cure such failure. If such failure cannot reasonably be cured within such thirty (30) day period, the length of such period shall be extended for the period reasonably required therefore, if Lessor commences curing such failure within such thirty (30) day period and continues the curing thereof with reasonable diligence and continuity. Reason for setoff of amounts due under this Lease shall include, but are not limited to, remedying heating and air conditioning equipment and roofing deficiencies. Each occasion of setoff of rental amounts due under this Lease shall be contingent upon the prior approval of Lessee's legal counsel.

Lessor: Lessee: Florida Department of Highway Safety & Motor Vehicles

_____ _____

(SEAL)

FM 4054C (R05/04)

FM 4065 (R05/04)
Please initial Offeror acknowledgement on all pages of this submittal form:_____

STATE OF FLORIDA

DEPARTMENT OF MANAGEMENT SERVICES

PUBLIC ENTITY CRIME STATEMENT

REQUIRED: ADDENDUM VI

LEASE NUMBER: 760:0526

Public Entity Crime Statement: 287.133 Florida Statutes places the following restrictions on the ability of persons convicted of public entity crimes to transact business with the department:

A person or affiliate who has been placed on the convicted vendor list following a conviction for a public entity crime may not submit a bid on a contract to provide any goods or services to a public entity, may not submit a bid on a contract with a public entity for the construction or repair of a public building or public work, may not submit bids on leases of real property to a public entity, may not perform work as a contractor, supplier, subcontractor, or consultant under a contract with any public entity, and may not transact business with any public entity in excess of the threshold amount provided in s. 287.017 for CATEGORY TWO for a period of 36 months from the date of being placed on the convicted vendor list.

Lessor:

_____

Lessor's Signature

_____

Date

STATE OF FLORIDA

DEPARTMENT OF MANAGEMENT SERVICES

PUBLIC HURRICANE EVACUATION SHELTER

ADDENDUM VII

LEASE NUMBER: 760:0526

Pursuant to Chapter 252.385 (4)(b) F.S.; facilities that are solely occupied by state agencies and have at least 2,000 square feet of net rentable space in a single room or a combination of rooms each having a minimum of 400 square feet may be required to serve as a public hurricane evacuation shelter at the request of the local emergency management agencies.

It is hereby agreed and understood that in the event the facility being leased is selected for use as an emergency shelter the lessor, upon receiving notice form the Emergency Management Center, shall make the building available as a public hurricane evacuation shelter.

Lessor:

Lessee: Florida Department of Highway Safety & Motor Vehicles

_____ _____

STATE OF FLORIDA

DEPARTMENT OF MANAGEMENT SERVICES

DISCRIMINATION

REQUIRED ADDENDUM VIII

LEASE NUMBER: 760:0526

An entity who has been placed on the Discriminatory Vendor List may not submit a bid or proposal to provide goods or services to a public entity, may not submit a bid or proposal with a public entity for the construction or repair of a public building or public work, may not submit bids or proposals on leases of real property to a public entity, may not perform work as a contractor, supplier subcontractor or consultant under contract with any public entity and may not transact business with any public entity.

_____	_____
Lessor:	Lessee: Florida Department of Highway Safety & Motor Vehicles
_____	_____
Date	Date

STATE OF FLORIDA

DEPARTMENT OF MANAGEMENT SERVICES

TENANT IMPROVEMENT REIMBURSEMENT

ADDENDUM IX

LEASE NUMBER: 760:0526

WHEREAS, both the Lessor and the Lessee hereby agree that the Lessor has expended the sum of _____ Dollars ($_____) for which the Lessor is eligible for reimbursement, pursuant to Section 255.25 (3)(e) Florida Statutes. In the event the leased premises should be sold or otherwise transferred, the right to any tenant improvement reimbursement shall terminate.

Dated this the_____ day of _____, **20**_____.

Lessor: Lessee: Florida Department of Highway Safety & Motor Vehicles

_____ _____

OR

WHEREAS, both the Lessor and the Lessee hereby agree that the Lessor does not intend to seek reimbursement for tenant improvements, pursuant to Section 255.25 (3)(e), Florida Statutes.

Dated this the_____ day of _____, **20**_____.

Lessor: Lessee: Florida Department of Highway Safety & Motor Vehicles

_____ _____

ATTACHMENT D

STATE OF FLORIDA
DEPARTMENT OF MANAGEMENT SERVICES
DISCLOSURE STATEMENT

Lease No: 760:0526

Authority: Paragraphs 255.249(4)(h)(i), 255.01 F.S.

Check One: _____ Privately Owned ____ Entity Holding Title _____ Publicly ____ Owned

Name of Entity: _____

Name of Facility: _____

Facility Location: _____

City: _____ County: _____ Zip: _____

Total Net Rentable Square Footage in Building: _____

Federal Identification No. (F.I.N. or S.S.N.): _____

PUBLICLY OWNED FACILITIES COMPLETE THIS AND SIGNATURE PORTION ONLY:
IS THIS FACILITY FINANCED WITH LOCAL GOVERNMENT OBLIGATIONS OF ANY TYPE?

_____ **YES** _____ **NO**

This is to certify that the following individual(s) or entity holds 4% or more interest and/or the following public official(s), agent(s) or employee(s) holds any interest in the property or in the entity holding title to the property being leased to the State.

This is to certify that all beneficial interest is represented by stock in a corporation registered with the Securities and Exchange Commission or is registered pursuant to Chapter 517, Florida Statutes, which stock is for sale to the general public. _____ Yes _____ No

If entity is a Corporation (not registered with the Securities and Exchange Commission), provide information for any individual holding 4% or more interest in the Corporation. If no one holds more than 4% then so state.

Name: _____

Home Address: _____

Principal Occupation: _____

Occupational Address: _____

Percent of Interest: _____

Name: _____

Home Address: _____

Principal Occupation: _____

Occupational Address: _____

Percent of Interest: _____

(Attach additional pages if necessary)

The equity of all others holding interest in the above named property totals: _____.

If a public official, agent or employee provide:

Name of individual: _____

Name of public agency: _____

Position held: _____

If Owner(s) is an Individual:

_____ _____
(Print or Type) (Manual Signature)

_____ _____
(Print or Type) (Manual Signature)

Date Signed: _____

If Owner(s) is Corporation, Partnership, Trust, etc:

_____

By:

Print or Type Name Corporation, Partnership, Trust, etc.

CORPORATE SEAL

_____
Authorized Signature

This is to certify that I, _____, as_____,
(Print or Type Name (Print or Type Title)
am authorized to sign for the required information thereon.

Date Signed: _____

Disclosure Statement

Additional Page Lease No.: 760:0526

Name: _____

Home Address: _____

Principal Occupation: _____

Occupational Address: _____

Percent of Interest: _____

Name: _____

Home Address: _____

Principal Occupation: _____

Occupational Address: _____

Percent of Interest: _____

Name: _____

Home Address: _____

Principal Occupation: _____

Occupational Address: _____

Percent of Interest: _____

Name: _____

Home Address: _____

Principal Occupation: _____

Occupational Address: _____

Percent of Interest: _____

Name: _____

Home Address: _____

Principal Occupation: _____

Occupational Address: _____

Percent of Interest: _____

ATTACHMENT E

DIVISION OF STATE FIRE MARSHALL

PLANS REVIEW FEES, PROCEDURES AND REQUIREMENTS
DIVISION OF STATE FIRE MARSHALL

Plans Review Fees, Procedures and Requirements

The plans for all construction of any new state owned or state lease building and renovation or alteration of any existing state owned or state leased building are subject to review and approval of the Division of State Fire Marshal for compliance with the Uniform Fire Safety Standards prior to commencement of construction or change of occupancy. The Division of State Fire Marshal may inspect state owned and state leased spaces as necessary prior to occupancy or during construction, renovation, or alteration to ascertain compliance with the uniform fire safety standards as per Florida Statutes 633.085 and 69A-52, Florida Administrative Code.

69A-3.009 (12), FAC, defines a state owned building as:

(a) "State-owned building," as used in Chapter 633, F.S., and any rule adopted by the State Fire Marshal, except as provided in paragraph (b) of this subsection, means any structure used or intended for supporting or sheltering any use or occupancy of which the state, any state agency or department, or the Trustees of the Internal Improvement Trust Fund is the record owner of the legal title to such structure.

(b) "State-owned building" does not mean or include a pole barn, a picnic shelter, a lift station, an animal pen, an animal feeder, a pump house, a one-family private residence, a two-family private residence, a forestry fire tower or other fire tower, a radio tower, a building no longer in use, an empty building, or a greenhouse.

DESIGN CRITERIA

The Life Safety portion of the plans shall be designed in accordance with the **National Fire Protection Association (NFPA) 101, Life Safety Code; NFPA 1, Fire Prevention Code; and adopted NFPA Standards**. See Florida Administrative Code 69A-3.012 for the adopted edition of NFPA 101 & 1 and a list of adopted NFPA Standards. (http://fac.dos.state.fl.us/)

PLANS REVIEW FEES

The fee for plans review is determined by multiplying the estimated construction/ renovation cost of the building, by the constant 0.0025. The minimum fee is $100.00. This does not include the cost of the land, site improvements, civil work or furniture & equipment.

Example:

$1,000.000.00 Construction Cost x .0025 = 2,500.00 Fee

Please initial Offeror acknowledgement on all pages of this submittal form:_____

METHOD OF PAYMENT

After plans are received an invoice will be prepared and sent at which time payment can be made by personal check, money order or, if a state agency is paying, a Samas – Journal Transfer. Please make check or money order payable to the Department of Financial Services. Fill in the memo portion with "SFM Plans Review fee" and return payment with invoice.

COVER LETTER

Please include a cover letter with the following information:

1. Is this a state-owned or state-leased building? (see definition on page 1)
2. Project description and project number
3. Building name, address and county, and building number
4. Site name and address.
5. Project square footage.
6. Occupancy type, construction type, and building height (feet and stories).
7. Is this a change in occupancy?
8. Estimated construction cost of the building or renovation. This does not include the cost of land, site improvements, civil work or furniture and equipment.
9. Architect's name and address.
10. Who (name and address) is responsible for paying the fee?
11. Where (name and address) should the plans be sent after the review?
12. Agency name and state agency contact person (name and phone #) for this project.
13. Name and phone # of the local fire authority.
14. If this is state lease (either private sector lease or Department of Management Services facility), please provide the facility's name, lease number, state agency occupying the lease, and send copies of the cover letter to:

Anthony Andreala
Department of Management Services
Division of Real Estate Development
and Management
4050 Esplanade Way
Building 4050, Suite 315
Tallahassee, Fl 32399-0950

Dan Hedrick
Department of Management Services
Division of Real Estate Development
and Management
4050 Esplanade Way, Suite 315
Building 4050, Suite: 315
Tallahassee, Florida 32399-0950

WHAT TO SUBMIT

Submit cover letter and two sets of contract documents (signed and sealed) and one signed and sealed set of specifications to:

If Sending By Regular Mail

Division of State Fire Marshal
Plans Review Section
200 East Gaines Street
Tallahassee, Florida 32399-0342

If Sending By Overnight Service

Division of State Fire Marshal
Plans Review Section
325 John Knox Road, Atrium Building
Tallahassee, Florida 32303

Please initial Offeror acknowledgement on all pages of this submittal form:_____

PLANS SUBMISSION

The Division of State Fire Marshal will require the submitter to furnish two sets of contract documents (signed and sealed) and one set of signed and sealed specifications for review to the Plans Review Section. The submitter may, however, submit plans at an earlier stage, i.e., design review, in which case only one unsigned set needs to be submitted. **Only one design review will be allowed per project**. When the documents are approved for construction, the signed and sealed set will be stamped "APPROVED" and returned to the submitter. The stamped set of plans must be kept on the job site for the fire safety inspector's use at the time of inspection. It shall be the responsibility of the submitter to see that the "approved" set of plans is on the construction site before work begins and remains there until final inspection and approval has been issued. Plan approval is good for one year from the date of issue. The construction contract must be let within this period or the approval will expire and the plans must be re-submitted with another review fee. The editions of the pertinent codes that will apply to your project will be those that are adopted at the date of your first submittal, regardless of phase, i.e. 50% or final, and will not change even if a newer edition is adopted during the review process.

Any change orders or redesign during construction that affect life safety shall be submitted for review with the State Fire Marshal's file number indicated. There is no additional fee required for changes.

The review process allows 30 calendar days for review of all state-owned property and 10 working days for review of state leased property.

If there are any special circumstances or hazards that require further clarification, the reviewer will attempt to contact you; therefore, please include the name and telephone number of a contact person with your plan submission. Please remember that if you are called and asked for additional information or clarification, the reviewer needs this information in writing before he can approve the project. If the statutory time (10 working days on a lease or 30 calendar days on state owned) expires he must disapprove the project and a re-submittal process may add further delay to the project.

PLAN INFORMATION

The following items are areas where we must have your assistance. Please ensure that all submittals address these necessary items where applicable and help us prevent lost time due to disapprovals based on lack of information.

- **Renovation or Alteration** - Any alteration or any installation of new equipment shall be installed under the requirement of new construction. The scope of work shall be identified clearly. Show the number of floors in the building and the location of the project under consideration in comparison to the entire floor and building.

- **Equivalency Concepts** - Any requirement of the code that a designer wishes to modify by alternative arrangements shall in no case afford less safety to life than the code presently requires. Any request to use equivalency concepts will only be considered when technical documentation is submitted.

- **Classification of Occupancy** - Plans shall indicate the type of occupancy based on N.F.P.A. 101, Chapter 6.

- **Change of Occupancy** - The designer shall identify the existing type of occupancy and clearly identify the new occupancy use and areas.

- **Floor Area** - The gross square footage of the building shall be indicated on the plans. All assembly rooms shall indicate the net floor area.

- **High Hazard Area** - Any areas of a building, structure, or parts thereof, containing highly combustible, flammable, explosive products or materials which are likely to burn rapidly shall be identified on the submittal. The designer shall identify amounts and types of hazardous materials used throughout the facility.

- **Means of Egress** - All three components of the means of egress (exit access, exit and exit discharge) shall be clearly identified. Travel distance to exits shall be detailed.

Please initial Offeror acknowledgement on all pages of this submittal form:_____

- **Occupant Load** - The occupant load for each floor and calculations showing how the load was obtained shall be shown. All assembly rooms, spaces, or areas shall be identified and calculated with calculations shown on plans.

- **Construction Type** - The type of construction shall be identified as per N.F.P.A. 220.

- **Atrium** - Any building in which the designer has incorporated an atrium shall have the atrium area clearly defined on the contract document. Atrium shall be in accordance with NFPA 101, 8.2.5.6.

- **Penetration of Smoke or Fire Barriers** - Passage of pipes, conduits, bus ducts, cables, wires, air ducts, pneumatic ducts and similar service equipment through smoke and/or fire barriers shall be detailed on the contract documents.

- **Fire Detection, Alarm and Communication Systems** - All existing or new systems shall be clearly identified on the plans. The type of system and the appropriate N.F.P.A. standard that was used for the design and installation shall be indicated on the plans and signed and sealed by the Engineer of Record.
- **Automatic Sprinkler System, Standpipes and Fire Pumps** - All existing or new systems shall be clearly identified on the plans. The type of system and appropriate N.F.P.A. standard, which was used for the design and installation, shall be indicated on the plans and signed and sealed by the Engineer of Record. Hydraulic calculations, also signed and sealed by the Engineer of Record, shall accompany the plans where applicable.
- **Correction Facilities** - The use condition of the area shall be clearly indicated as per NFPA 101, Chapter 22.

- **Lease Spaces** - If the leased space is on a floor located above the level of exit discharge (LED) a plan of the LED is required to be submitted to ensure proper exiting from the building.

- The plan shall have the correct name of the facility: Building Number, Office/Complex Name, Street Address, and City, County, and Zip Code, and any assigned lease number noted on the document.

- Include site plan to scale showing project, distances to nearby buildings, fences, parking, and location of hazardous features such as fuel storage or incinerators, and fire lanes if required by NFPA 1.

- Include floor plan(s) drawn to scale showing walls and partitions, openings, door swings, built-in features, changes in elevation such as steps or ramps, dimensions, and notes to indicate what is shown and the use (room name) of each space.

- Schedules for doors, windows and hardware.

- Drawings of HVAC systems.

- Show the following on plans, if applicable: exit markings, emergency lighting (type and location), fire extinguisher(s) (type and location), nationally tested wall assembly details for rated walls, stair and handrail details, interior finishes and their flame spread ratings.

- Show any special fire extinguishing systems such as dry chemical hood systems.

CONSTRUCTION INSPECTIONS

The review fee will cover plans review and up to three (3) construction site inspections. (1) an underground fire main inspection (if applicable); (2) an intermediate inspection at approximately 65% completion (before covering walls and ceilings); (3) and a final inspection prior to occupancy. The intermediate (65%) inspection is optional at our discretion, and depends upon the size and complexity of the construction project. The purpose of construction site inspections is to ensure that the project is in fact constructed in accordance with the approved construction documents.

Any re-inspection required as a result of deficiencies found during the final occupancy inspection shall result in additional fees billed to the Contractor for re-inspection at a rate of $65.00 per hour, per Inspector, portal to portal, plus expenses. With this

Please initial Offeror acknowledgement on all pages of this submittal form:_____

in mind, the contractor should have completed his own systems testing and inspection punch list and made the corrections necessary in order to eliminate re-inspections as much as possible.

HOW TO REQUEST AN INSPECTION

The following inspections must be considered:

1. Underground: **REQUIRED** if an underground fire main is installed. This inspection must be performed before cover-up.
2. Intermediate: **REQUIRED** if so indicated on the approval letter, or required by the SFM inspector during the initial on-site meeting.
3. Final: **REQUIRED.**

The construction documents must be approved prior to commencing construction of the project. Any request for the use of an alternative system, or change made to the approved plans must be approved by the Plans Review Section prior to its installation. Throughout the various construction phases, ALL requests for inspection shall be made at least five (5) working days in advance using the enclosed DFS Form DI4-1528. The request may be forwarded by mail or facsimile to the Plans Review Section (see form for fax # and address).

The Plans Review Section will route the request to the appropriate field office where the local field inspector will then contact the requestor to make final arrangements for the inspection.

This request form has to be completed in its entirety, otherwise, the request for inspection will not be granted. Additionally, if the plans are found to be disapproved or rejected by this office, the inspection will not be performed and a stop work order may be issued until the plans are submitted, approved, and the plans review fee is paid in full. Should you have any questions, please notify the Plans Review Section (850) 413-3733 prior to mailing this request form.

Should the project not pass inspection due to various deficiencies, a re-inspection within 30 days should be scheduled with the Inspector at that time. If the corrections cannot be made within that required time frame, it is the responsibility of the agency or requesting party to complete the attached inspection request form (DI4-1528) and submit it to Plans Review Section in Tallahassee, noting the date in which the project will be ready for re-inspection in order for him to reschedule the site for a re-inspection.

The following checklists have been provided for your use in preparing plans that contain sprinkler and fire alarm systems.

FIRE ALARM CHECKLIST

1. The fire alarm contractor shall be licensed for the scope of work submitted.
2. Provide contractor's names, address, phone and license number.
3. Provide job site address, occupancy type, design criteria (NFPA standard)
4. General description of how the system will operate. What will activate the system; will it go into general alarm or ring by zone; will it annunciate; will it be monitored by a central station; will the air handling system be shut down, elevator recall, etc.
5. Itemized list of equipment to be used showing quantity, manufacturer, model number, type of device, and CFM number.
6. Calculations to be complete. Indicate all electric current required in supervision and alarm conditions. Provide calculations on battery manufacturer's standard form.
7. Denote capacity of battery, and confirm adequate size when operating under the full-calculated load.
8. Voltage drop calculations showing that voltage drop does not exceed 5% drop.
9. Cut sheets for each type of device being installed.
10. Drawing showing location of devices, wire runs, number of conductors, zones, end-of-line resistors, and typical wiring method used on the devices.
11. If fire alarm work is resultant from an inspection (State Fire Marshal, fire department, etc.) provide copy of report.
12. Submittal must be complete. Examples: Candela ratings of strobes shall be identified. Ceiling heights shall be indicated when ceiling mounted strobes are used. Reflected ceilings are to be clearly denoted. Include light fixture types/locations, HVAC opening types/locations, and all architectural features (joist, beams, coffers, furrs, etc,) extending more than 4 inches from the ceiling plane. Rooms, spaces and areas shall be identified.
13. Differentiate between all existing and proposed components. If system or portion is existing, indicate date of existing system installation, or date of prior substantial system renovation.

Please initial Offeror acknowledgement on all pages of this submittal form:_____

SPRINKLER SYSTEM CHECKLIST

1. Occupancy class of each area or room identified.
2. All sprinklers identified by make, type, orifice size, temperature rating, thermal sensitivity, including all existing heads affecting the scope of work.
3. For large storage areas, provide storage height, method of storage, description of commodities, etc. If project is specialized storage design (NFPA 231, 231C, etc.) provide complete design statement denoting methodology for arriving at project area/densities.
4. All piping identified by size, type, inside diameter, and schedule, including all existing piping affecting the scope of work.
5. All ceiling information: heights, types, architectural profiles (vaults, coffers, furrs, etc.), construction assembly (combustible ceiling or framing? significant combustibles in ceiling cavity, etc.)
6. Sprinkler obstructions denoted (suspended light fixtures, dust work, architectural items, etc.)
7. H.V.A.C. openings shown
8. Method of maintaining sprinkler system at or above 40 degrees F identified. Describe all unheated areas and explain methodology of all types, sizes, locations, etc. of freeze protection devices.
9. Graphically highlight each hydraulic area, title each area on the plans, with matching title on each calculation set.
10. Location and rating of firewalls, unprotected vertical openings, and other assemblies affecting sprinkler design.
11. Size of city main at street, denoting dead end or circulating (or denote private supply)
12. Total area protected by each system on each floor.
13. Location, type, and listing of hangers.
14. Underground pipe size, length, location, type, point of connection to city main, bury depth, thrust blocks, and all appurtenances (valve types, water meters, valve pits, backflow preventers, etc.)
15. All hydraulic name plate information.
16. Setting for pressure reducing valve denoted.

HYDRAULIC CALCULATIONS FOR SPRINKLER SYSTEMS

17. Verify the water supply, test location, date (must be 12 months current) peak demand time (or calculated adjustment), and account for test elevation at calculations.
18. Verify hazard classification (light, ordinary, special occupancy, etc.).
19. Verify the design criteria (density/sq. ft. over the hydraulic design area).
20. Verify the location of the area calculated (most hydraulically demanding is not always the most physically remote) Page 7 of 8
21. Verify the dimensions of the area calculated (design area shall not extend beyond designated area served by each sprinkler). Sufficient length parallel to the branch lines or cross-mains, as required.
22. Verify the densities (sprinklers flowing at or above minimum required flow rate).
23. Verify the pipe sizes, lengths, equivalent lengths of fittings, and flow paths (account for all pressure losses).
24. Verify the hose demand.
25. Confirm that the system demand is at or less than the available water supply (include demand vs. supply graph).

MATERIAL CUT SHEETS FOR SPRINKLER SYSTEMS

26. Sprinklers, pipes, valves, pressure-reducing devices, flow switches, backflow preventers, water meters (all system devices effecting hydraulic design, whether existing or proposed).
27. Fire pump type, size, and design curves (provide current pump test for existing pump).

Please initial Offeror acknowledgement on all pages of this submittal form:_____

REQUEST FOR BUILDING SITE INSPECTION
PLANS AND REVIEW SECTION

GENERAL INFORMATION

REQUESTOR'S NAME: _____

PHONE NUMBER: _____

EMAIL ADDRESS: _____

STATE AGENCY: _____

TYPE OF INSPECTION *(CIRCLE APPROPRIATE ONE)*

- ☐ FINAL
- ☐ INTERMEDIATE
- ☐ FIRE ALARM SYSTEM
- ☐ HOOD SYSTEM
- ☐ SPRINKLER SYSTEN (ABOVE or BELOW GROUND)
- ☐ LEASE, PRE-OCCUPANCY
- ☐ LEASE, RENEWAL
- ☐ OTHER (SPECIFY): _____

NAME, STREET ADDRESS OR EXACT LOCATION OF FACILITY:

_____

_____

_____

INSPECTION DATE: _____

(Provide this office with a **MINIMUM** of five (5) working days notice prior to requested date of inspection. The SFM inspector for this facility will contact you for final scheduling)

STATE FIRE MARSHAL'S FILE #:_____

(Without this file #, your request will **not** be granted. Contact this office should you need assistance)

OCCUPANCY CLASSIFICATION: _____

(BUSINESS, ASSEMBLY, ETC.)

SQUARE FOOTAGE & HEIGHT OF BUILDING:_____

LIST THE FACILITY'S LIFE SAFETY FEATURES:_____

_____

(Sprinkler, Standpipe, Fire Alarm, Smoke Control, other)

TYPE OF BLDG. CONSTRUCTION:_____

E-MAIL ALL REQUESTS TO: FirePrevention@fldfs.com

[or]

MAIL: Bureau of Fire Prevention - Plans Review Section
200 East Gaines Street
Tallahassee, Florida 32399-0342
COURIER: 325 John Knox Road, Atrium Bldg 3rd Floor
Tallahassee, Florida
PHONE: (850) 413-3171 FAX: (850) 922-2553 DFS-K3-1528 REV05/07

FM 4065 (R05/04)

Please initial Offeror acknowledgement on all pages of this submittal form:_____

ATTACHMENT F
ENERGY PERFORMANCE ANALYSIS
Instructions For Bidders

An Energy Performance Analysis (EPA) (pursuant to F.S. 255.254) is required to be completed for all leases over 5,000 square feet. This is an easy process to complete whereby utility bills from the past three (3) years are used to project the energy cost for the life of the lease. Both the past and future energy consumptions are part of the EPA. **Read the Energy Performance Calculation Method carefully.**

If utility bills are **not** available for the past three (3) years, a FEMP analysis has to be performed by a mechanical engineer. If a FEMP analysis is required due to the inability to perform an EPA, the FEMP analysis can be used as an alternative and will satisfy the requirements of the EPA.

Please initial Offeror acknowledgement on all pages of this submittal form:_____

STATE OF FLORIDA

DEPARTMENT OF MANAGEMENT SERVICES

ENERGY PERFORMANCE CALCULATION METHOD

In order to comply with Florida Statute 255.254, compute the building's Energy Performance Analysis (EPA) on a separate sheet of paper or use Excel spreadsheet software and provide copies of the utility bills in the ITB/RFP/ITN response package. See the procedures below to assist completing this requirement.

The EPA is a measure of the building's energy intensity. The higher the EPA the more energy intensive the building is when comparing like buildings/facilities. A building with a low relative EPA will be less expensive to operate compared to one with a higher EPA that performs the same functions. An EPA shall be calculated based on utility consumption data per year for the last 3 years. A longer evaluation period provides a more realistic EPA value.

The method to calculate an EPA (where there have been no changes in the size of the building/facility or occupancy-use schedules and assuming an all-electric building) is as follows:

Total kWh used, per year, divided by the square foot of metered space x cost per kWh =cost per square foot per year.
These figures will be used to project future energy cost for the duration of the lease.

If lessor can not provide 36 months of energy bills for the EPA or there has been or will be a change of usage for this facility a FEMP analysis will need to be performed, see below for requirements

Florida Energy Modeling Program (FEMP): A computerized program for evaluating a building's energy use, utilizing the normal systems design and evaluation block load programs. These are run as part of the mechanical design and / or evaluation for three scenarios on new or one scenario of existing buildings. All Offerors to an ITB/RFP/ITN of 5,000 square feet or more will be responsible for contracting an engineering firm to review the building and / or lease space and a run a block load program on any of the following systems: TRANE TRACE, CARRIER HAP or ELITE. The completed form, the output sheets from the system block examination and diskette must be forwarded to Department of Management Services with a cashier's check for $200 for each building reviewed to the attention of:

DMS FEMP Review Engineer
Department of Management Services
4050 Esplanade Way, Suite: 335G
Tallahassee, Florida 32399-0950

Please initial Offeror acknowledgement on all pages of this submittal form:_____

ATTACHMENT G
SUSTAINABLE BUILDING RATING
INSTRUCTIONS FOR BIDDERS

A Sustainable Building Rating (SBR) (pursuant to F.S. 255.254) is required to be completed for all leases over 5,000 square feet when at least one (1) year's utility bills are available. The attached addendum gives you a link to the Energy Star Portfolio Manager. This link walks you through the process of entering data from one (1) full year of utility bills. If one (1) year of utility bills are not available, a FEMP analysis will be required and the results submitted with your proposal **(Note that no more than one FEMP analysis will be required for any single proposal)**. Whereas the EPA equates to energy cost per square foot, the SBR compares how a building ranks with similar buildings. The lower the rating on the EPA (or FEMP if necessary) the better; however, the higher the SBR the better.

The SBA rating is much like the scoring of an exam, in that the higher a building scores the better. Although a score under 50% is not acceptable, a Offeror can explain in their proposal what they plan to do to bring their building into compliance. Prior to a lease being awarded (if a building scores under 50% on the SBR), the proposed awardee will be required to prove by means of a FEMP analysis that their building will be modified to meet an acceptable range. The FEMP analysis shall be completed based on a design developed from Attachment A: "Agency Specifications".

Please initial Offeror acknowledgement on all pages of this submittal form:_____

STATE OF FLORIDA

DEPARTMENT OF MANAGEMENT SERVICES

SUSTAINABLE BUILDING RATING

Pursuant to F.S. 255.254, no state agency shall lease a facility without having secured an evaluation of life-cycle costs based on sustainable building ratings. DMS has determined that the Federal Energy Star Program, developed by the Department of Energy, shall provide a suitable sustainable rating for all DMS approved leases. This rating will be used as selection criteria when soliciting agency lease proposals. The minimum acceptable rating for any proposed leased facility shall be no less than 50, as determined by Energy Star Portfolio Manager. See the procedures below to assist in completing this requirement.

The Energy Star Portfolio Manager is a free tool provided by the Department of Energy that measures the facilities relative energy efficiency. The higher the Energy Star rating, the more energy efficient the facility is when comparing like buildings/facilities. All things being equal, a building with a high relative Energy Star rating will be less expensive to operate compared to one with a lower Energy Star rating that performs the same functions. An Energy Star rating shall be determined by the landlord inputting building characteristics into the Energy Star Portfolio Manager, which is located at, http://www.energystar.gov/index.cfm?c=evaluate_performance.bus_portfoliomanager.

Some of the information to be inputted into the Energy Star Portfolio Manager include; gross square footage, utility consumption, building occupancy, occupancy hours, function of the facility, number of computers, parking garages, and data centers.

DMS staff will review the building rating, with the supporting documentation for accuracy. Inaccurate or incomplete data entered into the Energy Star Portfolio Manager may deem the proposal non-responsive, and the facility will be taken out of consideration of proposed leased space.

DMS understands under certain situations, a sustainable building rating provided by Energy Star may not be attained. For example, this can happen when a data center is more than 10% of gross sq. ft. of the facility, or when a parking garage sq. ft. is larger than the facility itself. If the lessor can not attain an Energy Star rating, a FEMP analysis will need to be performed, see below for requirements.

Florida Energy Modeling Program (FEMP): A computerized program for evaluating a building's energy use, utilizing the normal systems design and evaluation block load programs. These are run as part of the mechanical design and / or evaluation for three scenarios on new or one scenario of existing buildings. All Offerors to an ITB/RFP/ITN of 5,000 square feet or more will be responsible for contracting an engineering firm to review the building and / or lease space and a run a block load program on any of the following systems: TRANE TRACE, CARRIER HAP or ELITE. The completed form, the output sheets from the system block examination and diskette must be forwarded to Department of Management Services with a check for $200 for each building reviewed to the attention of:

Attention: DMS FEMP Review Engineer
Department of Management Services
4050 Esplanade Way, Suite: 335G
Tallahassee, Florida 32399-0950

Please initial Offeror acknowledgement on all pages of this submittal form:_____

ATTACHMENT H

AGENCY DISCLOSURE AND COMMISSIONS AGREEMENT

Please initial Offeror acknowledgement on all pages of this submittal form:_____

COMMISSION AGREEMENT
REPRESENTATION OF THE STATE OF FLORIDA AND ITS RESPECTIVE AGENCIES

Agreement ("Agreement") is entered into as of this _____ day of _____, 2009, by and between ("Owner") and The State of Florida ("Tenant "), and _____Cushman & Wakefield of Florida, Inc._____ _____(Broker).

The following provisions are true and correct and are the basis for this Agreement:

..... A. Owner has legal title to a property located at _____, in Dade County, Florida on
..... which tract is an office building/project commonly known as _____(the "Building"), and which is
..... further described as, or a portion of, Property

..... Appraisers Parcel Number: _____.

..... B. Broker has presented the office space needs of Tenant to Owner and has and will render services in connection with the
..... leasing of office space to the Tenant.

..... C. Should a Lease (herein so called) be consummated, Owner has agreed to pay The State of Florida a real estate
..... commission in consideration for services rendered and to be rendered in consummating a Lease pursuant to the terms and
..... conditions set forth herein.

..... D. Owner understands and agrees that Broker is serving solely as a representative of Tenants' interest. Likewise, Owner
..... acknowledges that the applicable fee structure(s) defined below, as mutually agreed between Owner, Broker and Tenant, will
..... be (has been) considered and included within the Owner's proposal for lease.

..... NOW THEREFORE, in consideration of the mutual promises set forth herein and for other good and valuable consideration
..... the receipt and sufficiency of which is hereby acknowledged, the parties hereto agree as follows:

..... 1. **AGREEMENT TO PAY COMMISSION.** Owner hereby agrees to pay a real estate commission to Tenant in a sum equal to four percent (4%) of the total Gross Rentals to be paid to Owner over the term of the lease (with no offset). Should a lease term be for a period greater than ten years, Owner will pay only two percent (2%) of the total Gross Rentals to be paid to Owner for the period exceeding the 120th month of rental payments. The commission on any expansion shall be equal to four percent (4%) of the total additional Gross Rents added to, or above the total rents of the original lease, if the tenant broker is involved. The commission on any renewal shall be 2% of Total Gross Rentals.

..... 2. **PAYMENT OF COMMISSION**. The commission shall be due and payable to Tenant in cash (i) one half (1/2) at the time the Lease is signed and (ii) the balance on the earlier to occur of (a) the first day that Tenant occupies all or any portion of the space covered by the Lease, or (b) commencement of the term under the Lease. If Tenant's space is expanded or if the Lease is renewed, the commission in relation to such renewal or expansion will be due and payable in full at the time an modification or renewal notice covering the expansion or renewal is executed by Owner and Tenant, if Tenant Broker is involved. Tenant hereby agrees to pay to Broker said commissions based on a separate agreement between Tenant and Broker.

3. **SUCCESSORS AND ASSIGNS.** The obligation to pay and the right to receive any of the commissions described above shall inure to the benefit and obligation of the respective heirs, successors and/or assigns of Owner or Broker. In the event of a sale or an assignment of the Property which includes Tenant's demised premises, Owner agrees to secure from the purchaser or assignee a written recordable agreement under which the new owner or assignee assumes payment to Tenant of all commissions payable hereunder.

..... 4. **REPRESENTATION OF TENANT.** Although Owner will pay the commission to Tenant, who will in turn pay Broker,
..... Broker will not be representing Landlord in the contemplated lease transaction. Broker will be representing only Tenant in
..... such transaction. Landlord acknowledges and agrees that it is responsible for any commissions due any other broker with
..... respect to this transaction

..... 5. Owner agrees to disclose to Broker and to Tenant any and all information which Owner has regarding the condition of the
..... property including, but not limited, to structural, mechanical and soil conditions, the presence of and location of asbestos,

Please initial Offeror acknowledgement on all pages of this submittal form:_____

..... PCB transformers, other toxic, hazardous or contaminated substances, and underground storage tanks in, on, or about the ..... Property. Broker is authorized to disclose any such information to Tenant.

..... 6. Each signatory to this Agreement represents and warrants that it has full authority to sign this Agreement on behalf of the ırty for whom he signs and that this Agreement binds such party.

..... 7. This agreement constitutes the entire Agreement between Owner and Tenant and Broker and supersedes all prior discussions, negotiations, and agreements, whether oral or written. No amendment, alteration, cancellation or withdrawal of this Agreement shall be valid or binding unless made in writing and signed by both Owner and Tenant and Broker. This Agreement shall be binding upon, and shall benefit, the heirs, successors and assignees of the parties.

8. NOTICES:

To Broker: Cushman & Wakefield of Florida, Inc.

210 N. Franklin Street, Suite 3600, Tampa, FL 33602

Attn: Judy Stenta, State of Florida Account Manager

To Owner:

_____

_____

_____

To Tenant:

_____

_____

_____

9. LEGAL DESCRIPTION (if not attached as Exhibit "A")

GREED AND ACCEPTED this ____ day of _____, 2009

TENANT AGENCY:	OWNER:	BROKER:
By _____ Print or Typewritten	By _____ Print or Typewritten	By _____ Print or Typewritten
_____ Title	_____ Title	_____ Title

Please initial Offeror acknowledgement on all pages of this submittal form:_____

ATTACHMENT I

GENERAL LAYOUT & FURNITURE PLAN - DEPARTMENT OF HIGHWAY SAFETY & MOTOR VEHICLES

MIAMI MOTORIST SERVICE CENTER

Please initial Offeror acknowledgement on all pages of this submittal form:_____

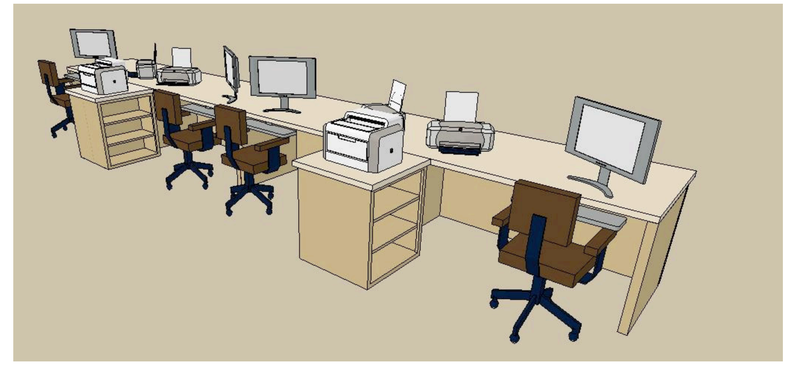

WORK STATION LINEAR DESIGN

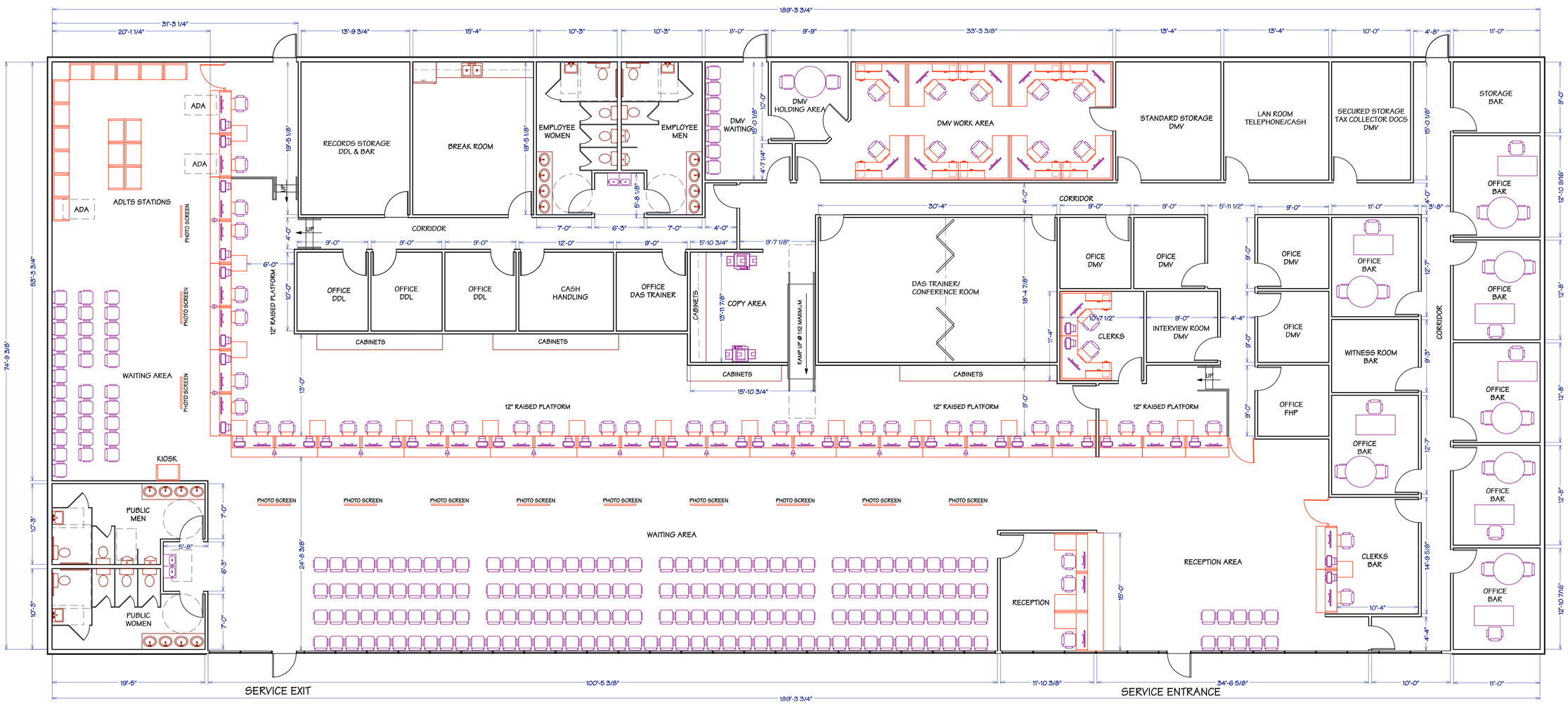

FLOOR PLAN

5/32 = 1'-0"

14,198.8 S.F. USABLE

PROTOTYPE FLOOR PLAN
DEPARTMENT OF HIGHWAY SAFETY & MOTOR VEHICLES
MIAMI SUPERCENTER

SHEET TITLE	PROTOTYPE FLOOR PLAN
DRAWN BY:	WEA
CHECKED BY:	
PROJECT NUMBER:	08-030
DATE:	November 19, 2008
REVISIONS:	
	November 21, 2008
	December 8, 2008
	January 19, 2009
	January 27, 2009

A-1

ATTACHMENT J

MODULAR FURNITURE SPECIFICATIONS - DEPARTMENT OF HIGHWAY SAFETY & MOTOR VEHICLES

MIAMI MOTORIST SERVICE CENTER

Please initial Offeror acknowledgement on all pages of this submittal form:_____

FLA. Dept. Hwy Safety _Motor Vehicle-Examiners

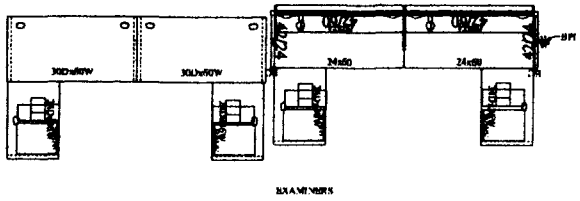

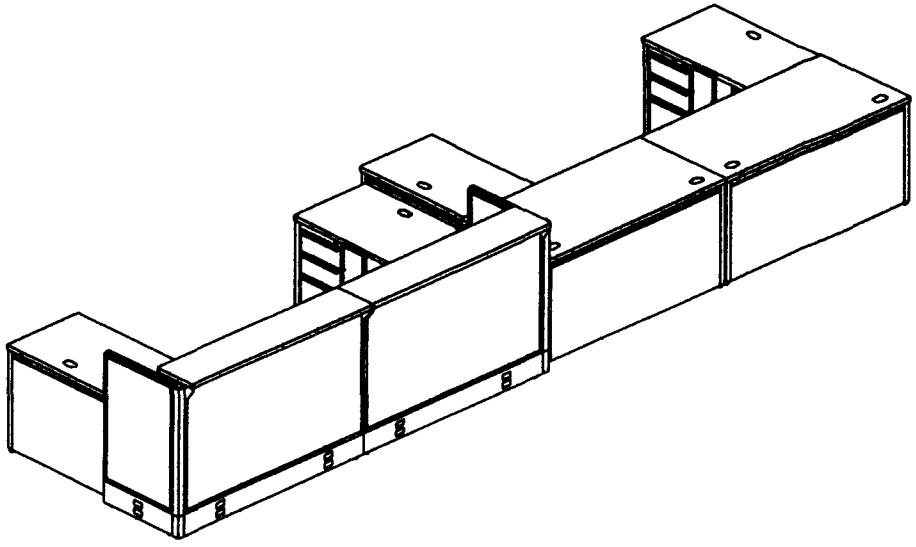

FLA. Dept. Hwy Safety _Motor Vehicle-Reception

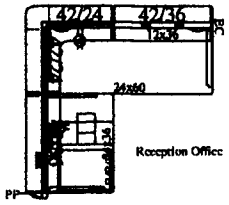

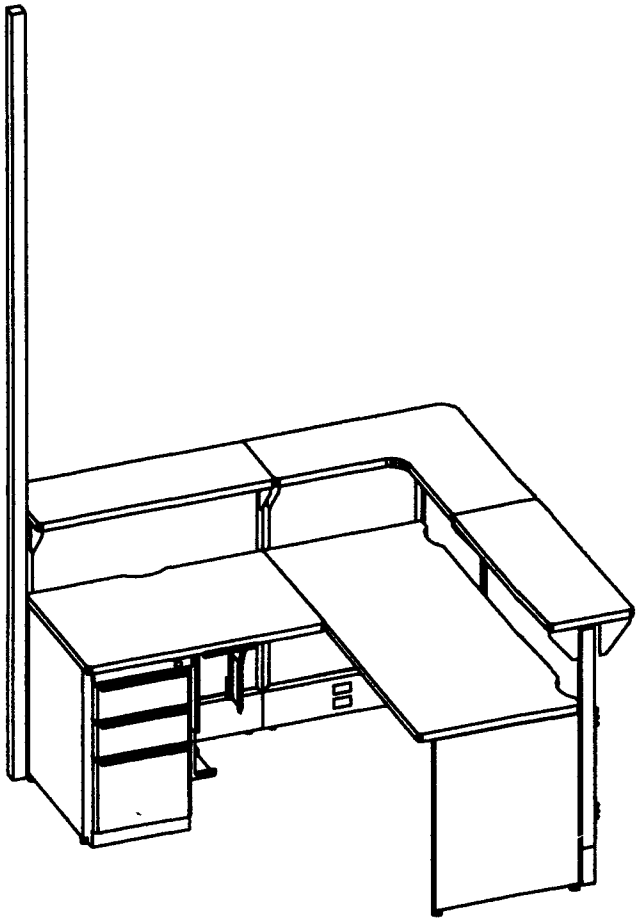

Standing ADLTS Stations

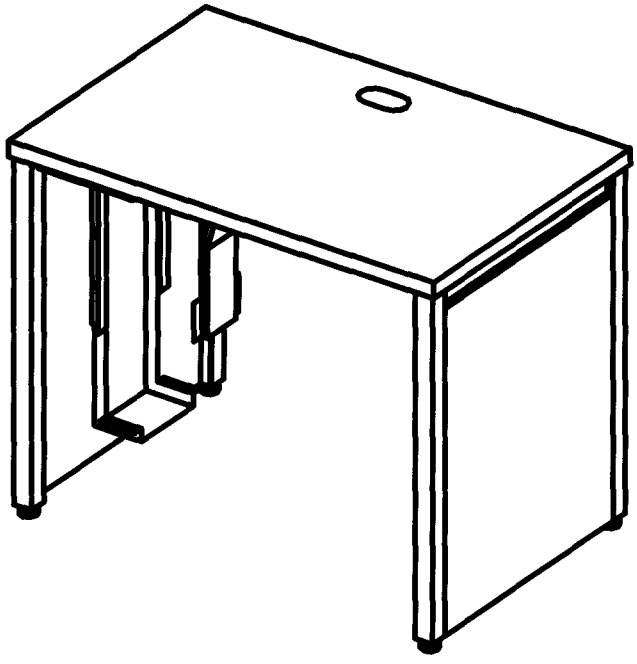

ADLT
Standing Height
Station
42"h
1/25/09

FLA. Dept. Hwy Safety _Motor Vehicle-ADA

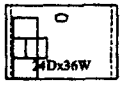

ADA

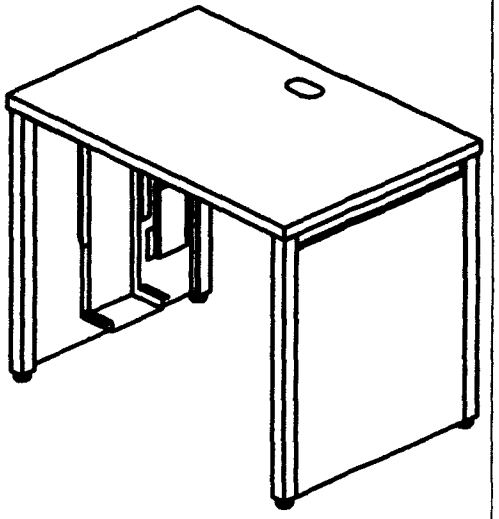

Additional Examiner & Reception Station Specifications

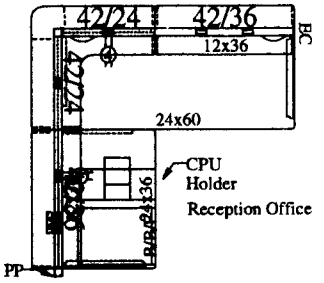

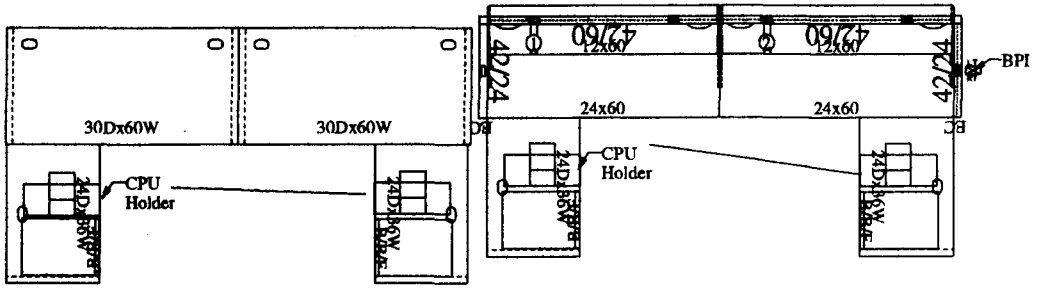

EXAMINERS

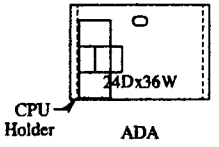

ADA

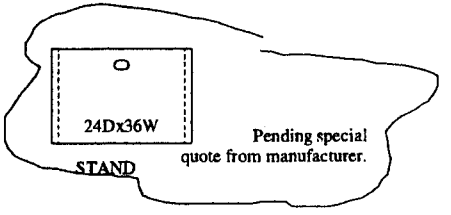

FLORIDA DEPARTMENT HIGHWAY
SAFETY & MOTOR VEHICLES
Typical's
1/6/09

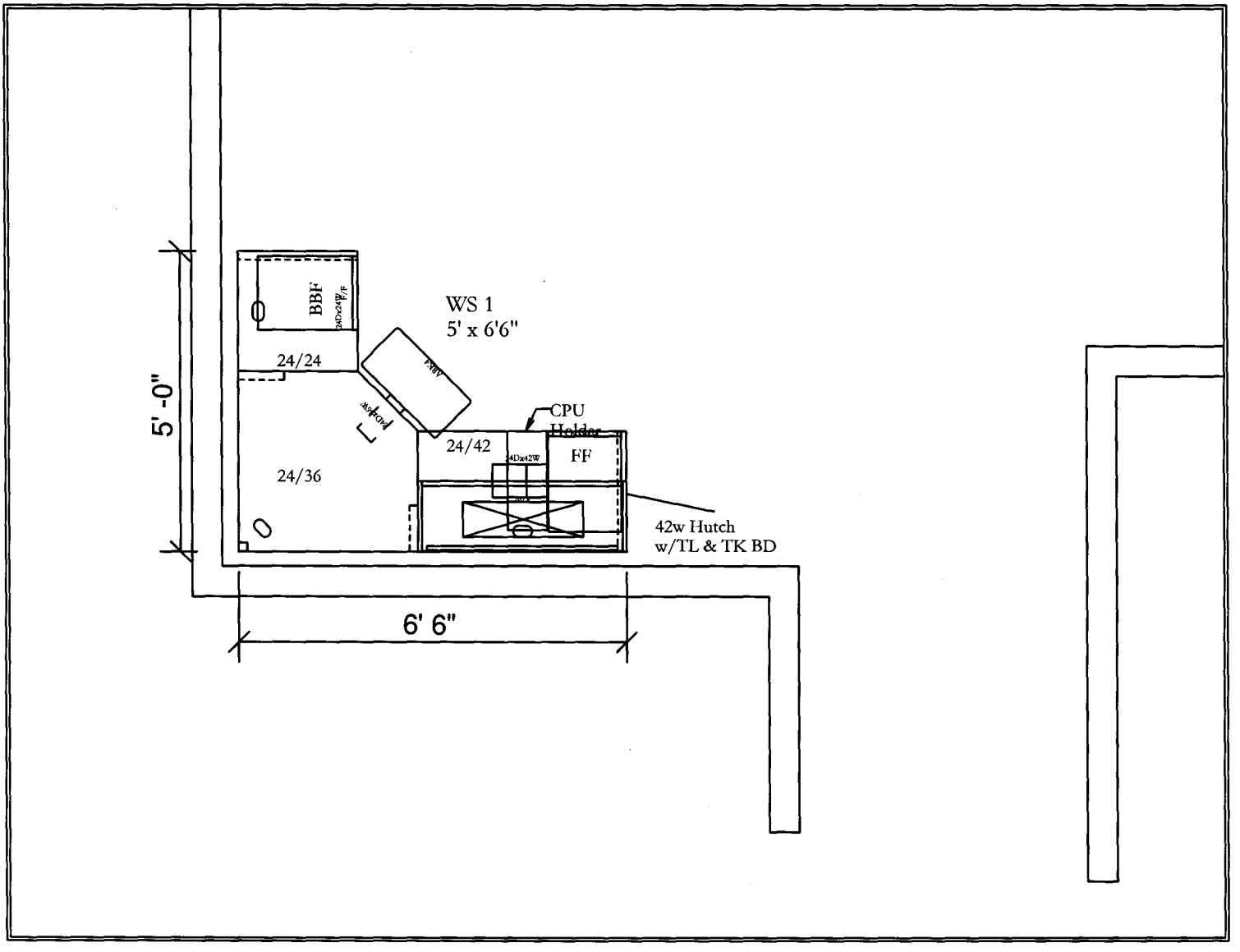
BBF
24Dx24W F/F
WS 1
5' x 6'6"
24/24
ABW
Adapter
CPU
Holder
24/42
24Dx42W
FF
24/36
42w Hutch
w/TL & TK BD
5' -0"
6' 6"

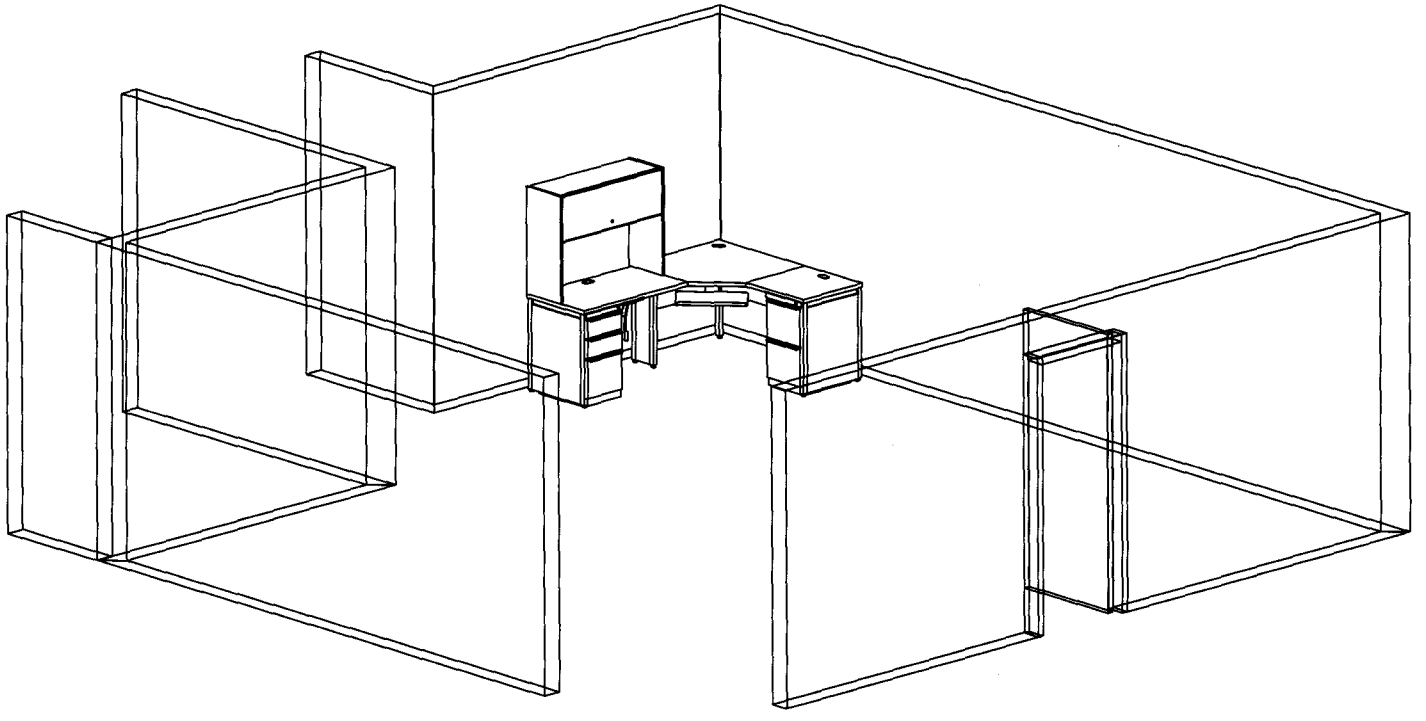

Florida Dept of Highway Safety & Motor Vehicles
Margate
1/31/09

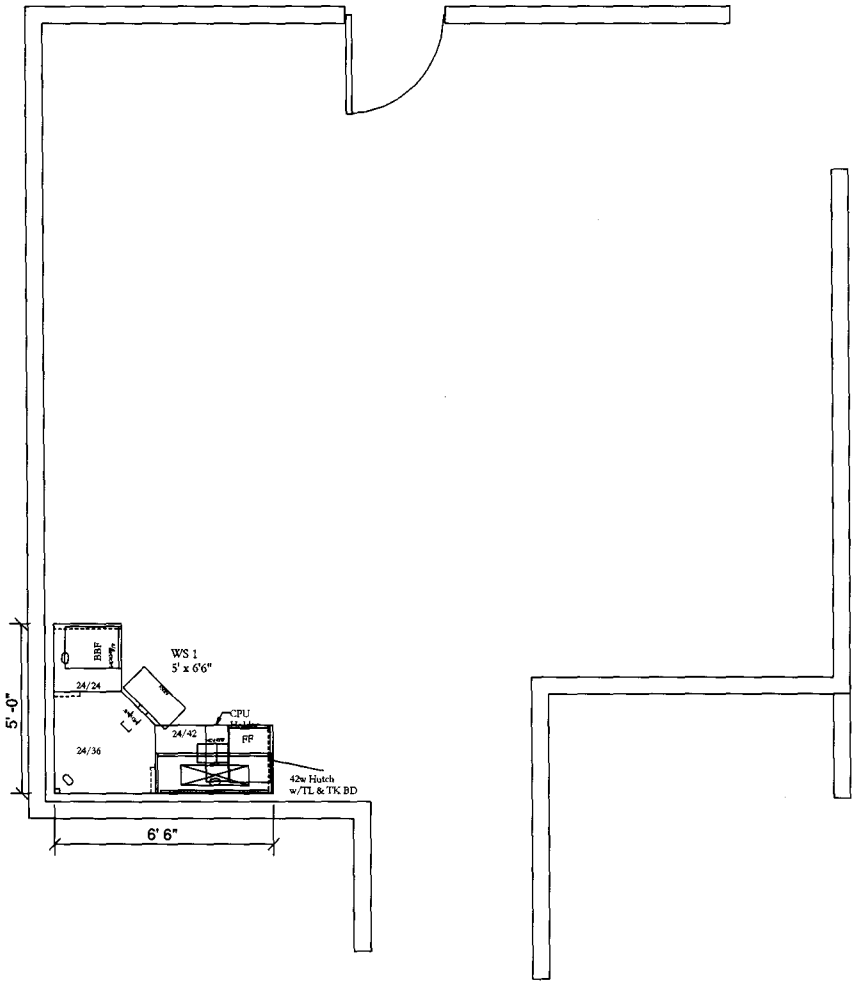

Florida Dept of Highway Safety & Motor Vehicles
Margate
1/31/09

ATTACHMENT K

SPECIAL POWER OF ATTORNEY

Please initial Offeror acknowledgement on all pages of this submittal form:_____

SPECIAL POWER OF ATTORNEY

I, _____, _____
NAME STREET ADDRESS

_____, _____, appoint _____,
CITY, STATE ZIP CODE NAME

_____, _____, _____,
STREET ADDRESS CITY, STATE ZIP CODE

as my attorney in fact to act in my capacity to do any and all of the following:

Any acts necessary regarding the entering of a bid for Lease Agreement No.720:0154, with the State of Florida, Division of Administrative Hearings, for the Building at _____ _____,
STREET ADDRESS
_____, FL, title to said property being held by _____
NAME

The rights, powers, and authority of my attorney in fact to exercise any and all of the rights and powers granted shall remain in full force and effect until this Power of Attorney is revoked by me or, the herein above Lease is awarded by the Division of Administrative Hearings.

DATED this _____ day of _____, 2009.

_____
Signature

STATE OF FLORIDA
COUNTY OF _____

PERSONALLY APPEARED BEFORE ME, the undersigned authority, _____, personally known to me, who, after first being sworn by me, affixed his/her signature in the space provided above this _____ day _____of ,2009.

_____ (SEAL)
Notary Public

Printed Name of Notary Public: _____

My Commission Expires: _____

FM 4065 (R05/04)
Please initial Offeror acknowledgement on all pages of this submittal form:_____